PUBLIC HEARING

A Public Hearing is scheduled for 6:15 p.m., Tuesday, May 26th, 2020 in the City of Zanesville's Council Chambers, 401 Market Street, Zanesville, Ohio to hear a request by the City of Zanesville to amend Chapter 1141.05 Table 15 of the City of Zanesville Codified Ordinances. All testimony for and against will be heard.

City Council meeting
Agenda of business
Tuesday, May 26, 2020

The Lord's Prayer

Pledge of Allegiance to the flag

Item no.

A. Roll call

B. Approval of minutes of May 11, 2020
Approval of Budget Hearing Minutes of March 10, 2020
Approval of Budget Hearing Minutes of March 12, 2020

C. Communications, reports, and resolutions

D. Proposed ordinances

1. Ordinance No. 2020-70 – Introduced by Council – An Ordinance approving the agreement to create the City of Zanesville – Perry Township Joint Economic Development District; and approving a Cooperative Development Agreement. (First Reading)

2. Ordinance No. 2020-71 – Introduced by Council – An Ordinance repealing Ordinance 19-96. (First Reading)

3. Ordinance No. 2020-72 – Introduced by Council – An Ordinance for the Ohio Department of Natural Resources Division of Mineral Resource Management regarding brine solution use. (First Reading)

4. Ordinance No. 2020-73 – Introduced by Council – An Ordinance authorizing the proper City official to enter into a professional contract with ADR for the preliminary engineering services for the Muskingum Avenue (Dug Road) Improvement, and declaring an emergency. (Emergency or First Reading)

5. Ordinance No. 2020-74 – Introduced by Council – An Ordinance authorizing the Wastewater Division to extend sanitary sewer services outside of the corporation limits, and declaring an emergency. (Emergency or First Reading)

6. Ordinance No. 2020-75 – Introduced by Council – An Ordinance repealing Ordinance No. 18-92, creation of a Downtown Redevelopment District. (First Reading)

7. Ordinance No. 2020-76 – Introduced by Council – An Ordinance authorizing the proper City official to enter into an agreement terminating an amended Historic Property Investment Agreement in connection with the Zane-Zenith Downtown Redevelopment District. (First Reading)

E. Ordinances for action

8. Ordinance No. 2020-65 Amended – Introduced by Council – An Ordinance authorizing the proper city official to purchase a new 2020 FYDA Freightliner Western Star 4700SB Dump Truck from FYDA Freightliner for the Street Division through the Ohio Department of Transportation Cooperative Purchasing Program. (Third Reading)

9. Ordinance No. 2020-67 – Introduced by Council – An Ordinance amending Chapter 1141.05 Table 15 Permitted and Conditional Uses in Business Districts. (Third Reading)

F. Traffic orders

No Traffic Orders were filed for this meeting.

G. Miscellaneous and unfinished business

Mayor Mason to provide an update on the 2020 Census

H. Private petitions and communications

No Non-agenda item petitions were filed for this meeting.

ZANESVILLE CITY COUNCIL MEETING – MONDAY, MAY 11, 2020

There were some technical difficulties and we started a little late as we were trying to get all the Councilmembers connected via teleconference. The Zanesville City Council met in regular session a little after 7:00 p.m. on Monday, May 11, 2020 in the City Council Chambers, 401 Market Street, Zanesville, Ohio. Mrs. Osborn was still not connected and was asked to try a different phone.

Mr. Vincent: Sadly, I think we are going to have to get started. We do have more than enough for a quorum here. We are five or six after 7:00 now, so let's get started.

Mr. Vincent: Good evening everyone and welcome to the Zanesville City Council meeting for May 11, 2020. Please stand and join me in the Lord's Prayer and the Pledge of Allegiance to the Flag.

Mr. Vincent: Welcome everyone. For those of you joining us on the public access channel, hopefully you can hear us okay. Due to the circumstances for the health and safety of everyone, most of Council is joining us tonight by conference phone. We may also have people on a separate conference line listening from home. They can dial in and listen. We are glad you are here.

The following members of Council answered Roll Call by phone: Mrs. Gentry, Mr. Ware, Miss Bradshaw, Mr. Sharrer, Mr. Foreman, Mr. Roberts, and Mr. Baker. Ms. Gildow and Mr. Vincent were present in person. Mrs. Osborn did not answer roll call.

Mr. Vincent: Mrs. Osborn is trying to dial in and get through. She is having some technical difficulties. We hope she can join us before this is over. At any point Council if you are not able to hear someone, please let us know and we will do our best to speak loud and clear to make sure everyone knows what is going on.

APPROVAL OF MINUTES

Mr. Roberts moved to accept the minutes of April 27, 2020 as written, seconded by Miss Bradshaw.

Roll call vote for approving of the minutes.
8 Ayes by phone
1 Ayes in person
0 Nays
Motion carries. The minutes are approved and accepted.

COMMUNICATIONS, REPORTS, AND RESOLUTIONS

There were none submitted for this meeting.

Mr. Foreman reported there is no sound on the television channel. Mrs. Osborn seconded.

Mr. Vincent: We will take just a moment to see if we can get the sound issues corrected. Can you hear now through the TV?

Mr. Foreman: No.

It was determined the microphones are not on. The cable channel is 1020. We have a nice color picture on the TV, don't we? The microphones came on and there was feedback noise. There is a yellow picture. The listeners were asked to turn their TV's down or off. The picture is good also. The feedback was still bad. Mr. Vincent asked if others could hear him. Mr. Foreman said the volume and picture were both good now.

Mr. Vincent: I think we are good now.

PROPOSED ORDINANCES

Ordinance No. 2020- 68 – Introduced by Council – An Ordinance authorizing the proper City official to advertise for bids, award construction contracts, and expend funds for the construction of the Rehabilitate Runway 4/22 Project, Runway 4 Obstruction Removal Project, and the Runway 34 Obstruction Removal Project, and declaring an emergency.

Mr. Roberts moved to waive the readings and it was seconded by Miss Bradshaw.

Mr. Vincent: Is there any discussion on waiving? We do have a June 15th deadline as it has to be bid out and awarded by then. That is the change; is it has to be bid out, correct?

Mr. Brown responded yes.

Mr. Vincent: With that we will have roll call vote for waiving of the readings.

Roll call vote on waiving of the readings.
8 Ayes by phone
1 Ayes in person Gildow
0 Nays
Motion carries.

Ms. Gildow moved for passage, seconded by Mr. Baker.

Mr. Vincent: Is there any discussion? We passed this before and the change is that we need to advertise for bids now. If there is no other discussion, we will have roll call vote for passage.

Roll call vote for passage.
8 Ayes by phone
1 Ayes in person Gildow
0 Nays
Motion carries. Ordinance is passed.

Ordinance No. 2020-69 – Introduced by Council – An Ordinance authorizing the proper city official to utilize Buchanan Auction Service for the purpose of disposing of surplus city property and declaring an emergency.

Mr. Baker moved to waive the readings and it was seconded by Mr. Sharrer.

Mr. Vincent: Is there any discussion on waiving? With that we will have roll call vote on waiving of the readings.

Roll call vote on waiving of the readings.
8 Ayes by phone
1 Ayes in person Gildow
0 Nays
Motion carries.

Mr. Baker moved for passage, seconded by Mrs. Gentry.

Mr. Vincent: If Council has any questions, I do have the Public Safety Director Doug Merry here. Does Council have any questions? What they are looking to do here is do a live auction getting additional revenue out of I think it is like 108 vehicles now, plus all the other items you saw in your packet. So, that is what they are looking for is additional money. The concerns that I have heard people express about doing this are when people show up to a live auction during all of this (pandemic) and they are going to wait until it is safe to do that. I am sure they will take all the precautions then at that time. So, probably June, maybe?

Doug Merry: Late June.

Mr. Vincent: Late June, I hope things are better by then. If there are no other questions, we will have roll call vote for passage.

Roll call vote for passage.
8 Ayes by phone
1 Ayes in person Gildow
0 Nays
Motion carries. Ordinance is passed.

ORDINANCES FOR ACTION

Ordinance No. 2020-65 – Introduced by Council – An Ordinance authorizing the proper city official to purchase a new 2020 FYDA Freightliner Western Star 4700SB Dump Truck from FYDA Freightliner for the Street Division through the Ohio Department of Transportation Cooperative Purchasing Program.

Ms. Gildow moved for second reading, seconded by Mrs. Gentry.

Mr. Vincent: Is there any discussion? With that there is as mentioned in our last meeting that we needed an amendment to this Ordinance to allow for financing. So, under Section One, the first sentence where it says hereby authorized to purchase, cross out of and add in "or finance". Council should have had a proposal in your packet with that. It is in red under Section One.

Ms. Gildow moved to amend the Ordinance to add in Section One "or finance" after the purchase.

Mr. Vincent: Do you want to strike "of"?

Ms. Gildow: No, I would like to put it after or finance.

Mr. Vincent: Oh, okay. Perfect, "or finance of" very good, good catch. So, I have a motion then to which is different than what you have in front of you. "Is hereby authorized to purchase or finance of a new-Do you still want that in there?

Ms. Gildow: No, I have reconsidered. I would like to scratch "of".

Mr. Vincent: So your motion is to scratch "of" and to add, "or finance". Correct?

Ms. Gildow: Yes.

Mr. Vincent: We have a motion, do we have a second?

It was seconded by Mr. Baker.

Mr. Vincent: Is there any discussion on this amendment? With that we will have roll call for the amendment.

Roll call vote on amending.
8 Ayes by phone
1 Ayes in person Gildow
0 Nays
Motion carries.

Mr. Vincent: We are now at Ordinance 2020-65 as amended. We are at second reading. What is Council's pleasure?

Ms. Gildow moved for second reading as amended, seconded by Miss Bradshaw.

Mr. Vincent: Is there any further discussion? Okay hearing none we will have roll call vote for second reading.

Roll call vote for passage.
8 Ayes by phone
1 Ayes in person Gildow
0 Nays
Motion carries. Ordinance is passed.

Ordinance No. 2020-67 – Introduced by Council – An Ordinance amending Chapter 1141.05 Table 15 Permitted and Conditional Uses in Business Districts.

Mr. Roberts moved for second reading, seconded by Miss Bradshaw.

Mr. Vincent: Is there any discussion? There will be a public hearing at our next meeting on Tuesday, May 26 at 6:15 p.m. We are meeting on Tuesday because of the holiday. Is there any other discussion? Hearing none, we will have roll call vote for second reading.

Roll call vote for second reading.
8 Ayes by phone
1 Ayes in person Gildow
0 Nays
Motion carries.

Mr. Vincent: With that, the other two Ordinances on your agenda will not appear there until it returns. They are both postponed.

Ordinance No. 2020-14 – Introduced by Council – An Ordinance authorizing the City to enter into Energy Savings Contracts with ABM Technical Solutions, LLC.

(Postponed for 6 months or until the Law Director recommends placement on Council's Agenda. Will be for Third Reading on October 26, 2020 unless otherwise directed.)

Ordinance No. 2020-15 – Introduced by Council – An Ordinance authorizing the City to enter into a Tax-Exempt Municipal Lease for the funding of Energy Conservation Measures in the city provided by ABM Technical Solutions, LLC.

(Postponed for 6 months or until the Law Director recommends placement on Council's Agenda. Will be for Third Reading on October 26, 2020 unless otherwise directed.)

TRAFFIC ORDERS

No traffic orders were filed for this meeting.

MISCELLANEOUS AND UNFINISHED BUSINESS

Mayor Mason: The employees, if you have noticed, have been wearing their face mask and practicing social distancing. Some things we all take seriously. As you know, probably three days a week, I am in our EMA Command meetings. We are still working on how to open businesses back up.

As I mentioned last week, there have been some reductions of revenue. The good news is our sewer, water, and sanitation and some of those have stayed fairly constant. We will be getting back with City Council probably within the next three weeks, Rhonda? We can discuss the impacts to the Income Tax. So, we will keep you apprised and get input from City Council on how to handle those matters.

Mr. Vincent: Okay, thank you, Mayor. Is there anything else from the Administration? With that we do have our masks, but because we are challenged here with sound and people hearing, I had to take mine off. We have our distance here. So we will continue being as safe as we can. Okay, we are now at Private Petitions and we have none.

PRIVATE PETITIONS AND COMMUNICATIONS

No Non-agenda item petitions were filed for this meeting.

Mr. Vincent: With that I will entertain a motion to adjourn unless Council has something.

The meeting adjourned about 7:25 p.m. by motion of Ms. Gildow and seconded by Mr. Roberts.

Mr. Vincent: All in favor of adjournment signify by saying aye.

A voice vote was held with all being in favor of adjournment. None were opposed. Motion carries.

Mr. Vincent: We stand adjourned. Thank you everyone and thanks for tolerating all of the challenges we had with technical and electronics, not people. We will get back together with you on May 26th. Thank you much and have a good evening.

Susan Culbertson
Clerk of Council

Daniel M. Vincent
President of Zanesville City Council

BUDGET HEARINGS FOR 2020
March 10, 2020 at 4:45 p.m.

The 2020 Budget Hearing meeting was held on March 10, 2020 and began at 4:47 p.m.

Council Members present: Sandy Gentry, Jan Bradshaw, Ann Gildow, Joey Osborn; J. Rob Sharrer, Mark Baker, Todd E. Ware and Andrew Roberts arrived around 5:00 p.m.

Others in attendance were Mayor Don Mason; Doug Merry, Interim Public Safety Director; Rhonda Heskett, Budget and Finance Director; Susan Culbertson, Clerk of Council; the presenters: Fire Chief Jeff Bell; Craig Stemm, City Maintenance; Tim Smith, Code Enforcement and Chief Building Official; and William Arnett, CD Director.

Fund 101-Division 4381,

Bldg & Code Enforcement-page 2

Tim Smith was scheduled for 4:45 p.m. Mr. Smith updated the Council with highlights as follows:

- His budget includes everything he needs as far as he knows. He had asked for a couple of things like revamping the office, but that doesn't come out of his budget.
- The biggest issue is the demolition budget which is a little over $500,000.
- Still in limbo on the Kemp properties.
- Four have already been demolished that had either burnt or were in horrible condition. One of them was not on the forfeiture list. There are six of them that need to come down. They are causing problems in the neighborhood. Three more are on the brink if something isn't done before too much longer. He was not sure where we are on these properties.
- Some of the properties were occupied and some at one time there were residents in those and interested in purchasing them. The problem is even though they didn't have to pay rent, they stopped paying their utility bills. So a number of them we had to condemn because they were living there with no water. It has been a real nightmare.
- Once you condemn the structures with them there what happens is we had a real nice one up on 150 Green Street that could have been easily occupied and rehabbed, but they stopped paying the utility bills and we had to condemn it. When they moved out they ransacked the place. They took the cabinets, the plumbing, and they just wrecked it. They spray painted the outside of the house.
- The house on Greenwood that just burnt is a total loss, but it was not a Kemp house. It belonged to Frank Hersh. He claims he has insurance. I didn't think he would. I was going to take it down on an emergency basis, but now I am going to file the paper work if he has insurance to find out. Rob Sharrer said he will talk with Tim about this.
- Frank Hersh was one of the owners on the 600 block buildings. It was asked if the City couldn't have filed a lien on his other properties. Mr. Smith said we didn't want it. There are not very many of his properties that we would want. Okay.
- The other thing we have hanging is the Munson School property. If we do have to tackle that you are looking at a couple hundred thousand dollars. Right now we are trying to find a way to maybe market it or renovate it. Again, that is a situation where the owner is deceased. There is an $80,000 mortgage on it to Ohio University Credit Union. I sent

paperwork to them and they have not responded. So there are a lot of things in limbo out there which is one of the reasons that Rhonda set money aside in the demolition budget for this year.

- We are looking to add one individual to our staff. That is going through the process with Council now. It has been budgeted. We look to have our seasonal workers hired sometime in mid-April. We will have our weed crew up and running as soon as we can. We may not have this position filled since it didn't get through Council last night. Sometime hopefully by the end of April we will have that full time individual on board. I will be glad to answer any questions.

Mr. Sharrer said he is going to ask one repeated question of everybody who comes before us today. If you had an extra $100,000 could you spend it?

Tim Smith: My 50th Wedding Anniversary is coming up. (Laughter broke out.) You might want to amend that question, Rob.

Mr. Sharrer: I am not amending anything. Is there anything that you don't have that if money were no object, to the tune of $100,000, is there anything that would make your job easier or more efficient or whatever?

Mr. Smith: If we had some additional money one of the things that the City fails to do sometimes especially in this job is we don't do a good job of transitioning. I am going to be 69 years old in May and I had planned on retiring last year and didn't. This job has a lot of duties and it will take someone a while to learn the whole process and to obtain the certifications needed. This would be one thing to consider.

The Mayor is trying to focus on some renovations of some of these houses as opposed to demolition. I am working through a number of different options right now looking at ways that we may be able to make that happen. That would be the only other thing that I could see that we might have a need down the road for additional funding.

Mr. Sharrer: I saw down here under Item 6, still struggling a little bit with the software? Has it gotten any better? Are we still scrolling to the bottom to hit enter?

Mr. Smith: It is what it is. I mean it is not as user friendly as the old software. It is not any more economical that I can see. We are paying $5,000 a year out in annual maintenance fees. Anything that you need to get fixed on it whether it is their fault or not, they want to charge you for it. It is a lot slower. I can't do reports and pull up information without spending money to customize reports. One of the things that would help is if we just had access to the data and some of the components on that software if they would just unlock it so we could get into make changes on it. They have us locked out of it and I am not sure how to get access to make changes not even on misspelled words. I am still working to try to streamline it the best I can.

Mr. Roberts: Is there anything else from Tim? I am just trying to keep us on schedule. Thank you, Tim.

Craig Stemm provided the update for his department with key points as follows:

- We spent most of last year at the Police Annex remodeling it. It is pretty much done now. It tied up a lot of our time last year. The Police Department is in there so we are about done other than tidying up.
- Budgetary wise this year we will be fine. We are going to take part of the money to buy Jamie Brannon a new service van for about $35,000 to replace the truck we got rid of a couple of years ago.
- We are going to work on Traffic Signals. We will put some GPS time clocks on Maple Avenue for about $8,000. The rest of it we are going to work on as we go.
- A lot of it is prior to the I-70 project. I met with ODOT and they are going to work with us and possibly install some radar detection and help us manage the corridor from Blue and Adair through Ninth and Main. That whole corridor to help move traffic when they start shutting ramps down and things like that. They offered to do it. I am not sure what they are going to do yet. They are going to meet with us before long and we are going to look at everything and see what will happen. They are going to pay for that part of it. We may have to upgrade some stuff. We are going to put some LED bulbs in and try to make some things ready to go before this I-70 project happens.
- Money wise I am not sure we can spend all that is there, but we will see what happens. We could do some more upgrades on Maple and some cabinets if we have time to do it all. The cabinet at Lowe's needs upgraded. Maybe the one on Military Road. It depends if I have enough people to get it all done or not.
- There was a grant a couple of years ago that bought all the equipment to replace everything over at Ridge and Brighton. We got the pole set last summer, but that is all the further we got. We have to try to do it next. It is a new cabinet, lights, and pedestrian lights from the grant money that came through.
- I think they are going to do the sidewalks now so that is what we need to do next.
- The building maintenance side of it whatever comes along is what they are going to work on like remodeling the Mayor's office now and we have some work to do upstairs. Plus all the general maintenance we do every day.

Mr. Roberts: It came up last night in Public Service about looking at some of these buildings and the windows and everything like that. Do you have guys on staff that are able to do that kind of work or is that something we would have to sub out?

Craig responded some of it. It depends how many and how big a job it is. If it is like City Hall to do all the windows, I doubt we could do all of that.

Mr. Roberts: It would probably be more cost beneficial to just let somebody else handle that.

Craig said it is not that they couldn't because they have four guys there, but that is a lot of work to do and still maintain all the heating and cooling systems in all of these buildings and all the plumbing and everything those guys do plus the small remodeling projects and things like that.

Mr. Sharrer: If you had an extra $100,000 in your budget.

Craig said no, we couldn't spend it. We don't have enough people to do that amount of work as far as that goes.

Mr. Sharrer said so a new employee.

Craig said we tried to hire an electrician last year, but we only had three people apply. One was qualified and he didn't take the job so that is where we are short. We did hire a general service worker and he is a little older gentleman, but he worked thirty some years as a plumber and a HVAC guy so he is pretty talented. He is working with Jamie right now. We hired a young guy for the Traffic Signal side and we are training him. Whether you are going to find any highly skilled tradesmen that can do some of this stuff is pretty doubtful right now I would say. But, we could always look at some intersections that need to be updated and hire in a contractor to update them. You could spend $100,000 pretty quick to fix some of the worst. There was also a traffic study or safety study on Pine Street. That would have been last year. It is still under progress and the plans on it are to update the traffic signals at Pine and Pershing, which is in pretty bad shape, and at Pine and Eppley. ODOT redid Pine and Maysville and Maysville and SR 719 last year which was paid through the Ohio Rail Commission for safety reasons.

Mr. Roberts asked if it is on loop or is it on timers down there at the corner of Pine and Maysville. Craig said it is just on time.

Mrs. Osborn wanted to know about the Maple traffic signals that are GPS time clocks. I know we have talked about some cross walks. Would that play into that or would that work with those if that comes to fruition?

Mr. Roberts said that is one of the things we discussed when we were talking about crosswalks. It would mess up everything on the timing.

Craig said time clocks will just reset all the controllers every day to the same time to keep the coordination running. What happens is one may drift a few seconds this way and another the other way and then before long you are stopping at every light. All that is going to do is keep it in time which will help. It won't solve all the problems on Maple. There are some problems with loops and we are going to work on this summer. Some places we may be able to throw in some cameras. That is what the Mayor has asked us to do this year to put a lot of effort in to Maple Avenue and downtown is going to be another issue when I-70 shuts down in the spring of 2021. Other than that, that is basically what we do.

Mr. Roberts: That sounds good. Thanks, Craig. Is there anything else for Craig? Okay, we are ahead of schedule and Chief Bell is early.

5:15 p.m.	Fire Chief	*Jeff Bell	Fund 270, Fire Operating-page 13 Fund #275-pg 13

Chief Bell said to highlight the 2019 year and what we did as follows:
New Garage Doors at Central Station

1. Key Code Locks at all Stations-our firefighters replaced a lot of the indoor locks in the doors
2. New Station Pickup for Eppley Station
3. New flooring and toilets at Eppley installed by firefighters, interior doors and handles, bathroom vanities at Leonard station installed by firefighters, Kitchen cabinets at Central refurbished by firefighters.
4. Strategic plan put in place for turnout gear to be NFPA compliant. Our gear has to be ten years or newer. When we bought it in the past we purchased it all at one time, but everyone then comes due at the same time so we staggered the purchase so Phoenix Fire gave us loaner gear to get us through and we are buying between 10 and 13 sets per year. We will be on a five year rotation. We will be NFPA compliant with our front line gear and our back up gear.
5. SRT Medic program established. Hosted a Mass Casualty class for 11 members who are SRT Medics to include active shooter training. Increased interoperability with ZPD.
6. In House Fire investigator class first step in establishing an investigation bureau and has decreased OT call-ins because now we have investigators on each of the shifts that can do the initial investigation, get the pictures, get things started and then hand them off the next day.
7. MARCS Radios were a large expenditure.

2020 Budget Items:

1. Training Tower - $15,000 Materials – Firefighters provide labor. We are the largest Fire Dept. in East Central Ohio and need to take the lead in training. Adult learners retain long term only 10% of what they see, 30%-40% of what they see and hear, but 90% of what they see, hear, and do. Building hands on repetitions is vital in developing and retaining necessary skills. Everything we do is putting templates together. When we go out the door we don't know what we are going to run into, but we have to train for those things. Hands on training is the best way to know what our limitations are and what our capabilities are so we are able to push ourselves in a safe training environment and see what we can do and what we need to work on or what we need additionally to do. When we do the hands on it is invaluable to us. It will be built in the lot beside the impound lot for the Police Department (PD) along Central Avenue and the PD said they weren't interested in it. We will build it where it is centralized so all the stations can come for training. We do classes and cutting up cars down there. We set up the burn station there when it comes to town for training.
2. Garage Door openers on emergency doors Wi-Fi capable. We are getting bids for that right now.
3. MARCS Radio Repeaters $26,100 when we got the MARCS System they told us there would be no dead zones. There is a dead zone that runs right down past the Safety Center through town and they said we could either spend half a million dollars and build a tower or we can get these repeaters. We are working on putting repeaters in the vehicles. Assistant Chief Vandenbark is working with them at the state level on everything to see which ones we need depending on which channel they give. That would make each vehicle a hot spot for the hand held radios. We have gotten into things where when we

are on a fire scene, when we are on our operations channel the IC's outside and the guys are just inside the door and he has no communication with them. So, we have to go to the fire ground, but then when we go to fire ground they can talk to each other, but dispatch doesn't know anything that is going on or anybody outside of that area doesn't. So, this would solve that and it would also solve if we are out doing safety talks, or out doing hydrants and one of those dead areas it would act as our own personal repeater. So there shouldn't be anywhere where you are not able to reach dispatch or be able to be reached by dispatch. When the original testing was done they were not using the handheld radios so no recourse as they were driving around in their cars and checking the signals which indicated no issues. We have been working with them and they are trying to make it right, but there are many levels we have to go through to get it rectified.

4. Thermal Imaging Camera replaced for Ladder 1-$8,000
5. Windows at Safety Center - $18,000 estimate but they may come in over budget so we will see how many we will do this year.
6. Turn Seats in Engine 2 and putting some new cabinets in -$6,550
7. Replace Half of Station Chairs - $4,500-we want half this year and schedule it out for replacement.
8. Replace Medic -1 Ambulance - $235,000 Thank you to Council and the administration as we needed a new squad. We have staff going up Friday to deliver the opticon and wiring and meet with them to go over the final specs.

Items for further study:

1. Paperless Check Sheets-We do big check sheets that get handed in once a month for every vehicle, but those sheets don't follow the vehicle so we will computerize them so they are available by phone for easy access for Vehicle Maintenance or other staff. It will be easier to track and not slow us down with the paperwork.
2. 40 hr. Inspection position-We currently have myself and one other 40 hour employee for inspections that we do. The arson investigation that we do is being done with the bureau. Any time Assistant Chief Hobson is on vacation or anytime something comes up and we have another duty we have to pull him off of what he is dealing with and we don't backfill that position. It slows down our inspection process. We would look at that in the future and it is a large item because you are adding a position that you are going to be paying.
3. Grant possibilities for E-1 and Tower 5-We are always looking for these. Tower 5 is a 1981 model and Engine one has a lot of maintenance issues. The plan right now is MARCS Radios 2022, Engine 2 in 2022, and the squad should be 2022 also. That should be the last payment years for that. We will probably be looking to spec out in 2022 so as soon as 2023 comes along we can hand that spec sheet in and hopefully get a replacement.

I tried to be quick. Do we have any questions?

Mr. Sharrer: I take it if you had an extra $100,000 in your budget you would go after these future things, correct?

Chief Bell: That would be something I would like to find how to budget, but I also hate to do payments. Right now I have Engine 2 as a payment, Engine 3 is a payment, MARCS Radios are a payment, and we just picked up a payment for an ambulance. I don't know what is going to come down as the ambulance was a surprise. We were able to do that. If we can get by, and we

can do it safely, I would love to if the money came down like in a grant or something, but I would hate in the next two years for something unknown to come up and we are committed to that other payment and there is no way if hard times fall in, right now I think we can get by, but that is why I am a little worried about additional payments.

Mr. Sharrer: So you would put it as contingency?

Chief Bell said yes. We have always come in at the end of the year and see where we are with our insurance and see where there is money and stuff like that. Some of these things we can move forward to and I would still like to do the paperless check sheets, I just don't have the final cost on it. When they came in first they were talking $500 a month. Assistant Chief Vandenbark has them talked down to the $330 range right now and still working on it. When I talked to IT they said for a program that is not very expensive for what you are getting out of it. It is something we can put our hydrants on, we can put all of our PPE on so it will also track those things. So that would be an investment I would like to do this year. The other ones because of the immense cost of it until something opens up I don't feel comfortable doing that. Are there any other questions?

Mr. Roberts: The thorough sheet was appreciated by Council, thank you.

Other thanks were also expressed.

5:30 p.m.	Police	*Tony Coury	Fund 201-Police Fund, page 6 Fund 250-Jail Operating Fund, page 11 Fund 820-Mandatory Drug Fines-page 31 Fund 821, State Forfeiture-page 31 Fund 822-Federal Forfeiture-page 32 Fund 823-LLEBG Fund-page 32

Tony Coury was told he could start. He asked, "What do you want to know?" It was asked if he has enough money and it was said he did not need to answer as they already knew the answer was no. Chief Coury said he could always use another quarter of a million or he will take half a million if Rhonda will give it to him.

I had a quick meeting with Rhonda this morning and discussed some of the things I had laid out earlier in the year. Right now we plan to purchase a few police cars and that is budgeted correctly. We are going to change over our handguns to 9 millimeter. After about a year's study of looking into that and the cost savings we can have with the 9 millimeter instead of a 45. The ballistics has changed so much in the last few years that we think we will be just fine with that move.

For this year I do not have a whole lot of stuff going on. I have new vehicles and new guns. The detective bureau needed some updated equipment. We are going to more than likely purchase that as it wasn't anything too major. Something that we pay for every year on a contract so basically our cell phone extraction software and training for that.

The status of the jail right now we are in pretty good shape. We know we had a couple of things we got gigged on in the annual inspection which is normal. It is not anything that would ever close our jail. We narrowed it down to two things and we got that taken care of as far as one of them was the TB testing that is required now. I am sure there will be some stuff come out soon with the corona-virus. Right now the only thing we are lacking is we got gigged on the condition of the male dorms. We do have that budgeted for this year. We are probably going to talk to Craig and his people to figure out if we can get somebody in there, maybe an architect to tell us what we need. I reached out to Genesis HealthCare. Dan Vincent got me a connection with the mental health side at Genesis. They have redone what is now the Sunnyview. We will take a visit up there to take a look to see what they have done to safe guard their patients. We will safe guard our inmates trying to do the same thing.

Ms. Gildow: So it is safety issues, not that they need fancier quarters.

Chief Coury: They always say they need better conditions. Out ceilings are kind of torn up and we are going to take a look at redoing them and how we do the lighting. The inmates like to take the lights and bust them out and they jam pencils in them. They do about anything and everything they can to destroy stuff. So there are better safeguarded lighting fixtures up there. We are looking now at taking the TV's completely out of the dorms. It is kind of mounting them on the outside of the window so they can see them through the window, but they can't physically touch them. Then somehow pipe in the sound to them. As far as the bathrooms they need updated. They are twenty–five plus years old now. We need to update some bathrooms and get a better system there, but that seems to be where the state is gigging us right now. Other than that we are passing the inspections.

The jail van was requested and there seems to be enough money to do the renovations and purchase the jail van. Our jail van is I think 16 years old. It is looking bad. It is kind of nickel and diming us a little bit, but it is not in too bad of shape. It is in the shape right now that we need to replace it. Hopefully we can get that through this year.

Staffing levels, as far as police officers, are at maximum and we will probably go down one here soon with the officer that was in trouble. We will need to replace him and we are going to continue, as I talked about, a traffic enforcement officer. We are going to continue that as we are just kind of looking at it. I know some of the numbers you have asked for and we have numbers from when we ran a trial before. We are actually starting this Friday with a full-time traffic officer that we pulled from the patrol ranks, but that is the only way we can do it. We are going to run that through the end of the school year. We will give him the weekends off based on because we want being the five days in the school zone. We will see what kind of numbers we get from that. He has been educated on exactly what we want and he understands. He is Patrolman Stillwell so if you receive complaints there will be a lot of zero tolerance for traffic enforcement. We will hand out some warnings and stuff like that, but there will be a lot of tickets issued. We will probably own Taylor Street for a little while. We will stop that complaint that I have heard for six to ten years. We will hear it again. Maple Avenue is another area that we want to get on and hit it hard. We have some other issues. Maple is just one of our complaints. We have traffic problems everywhere. We will hit Maysville and Pine Street. We will hit school zones and East

Main Street. We will also hit Blue Avenue and all three school zones. I don't know how much we will do down at the community school as they are older kids and not as many bus drop offs as the others.

Mr. Sharrer: How are things coming along with the county seized funds?

Chief Coury: They are turning over the forfeiture stuff pretty quickly. We didn't have a whole lot of forfeiture turnover in 2019, but we had an okay amount.

Mr. Sharrer: I just know we were way behind and we had to slap them around a little bit trying to get some extra money from them. How is that going now?

Chief Coury: My relationship with the Sheriff is good right now. We haven't had any issues. We communicate regularly. We have two guys out there assigned so we are pretty even. We are even. They have two and we have two. There is no real supervisor in that group. They are self-motivated. We have some really good things coming down the pike for 2020 with them. Things that will grab a lot of people's attention. They are very excited. We have spent a lot of money in the last six weeks buying drugs so we have some good forfeiture stuff coming down the pike.

Rob Sharrer: So a big party coming.

Chief Coury: People who push numbers like Rhonda will love it. She likes money.

Ann Gildow: We will all love that.

Chief Coury: Right, we all love money. Probably the biggest exciting thing right now that is going on with us is we took over as one of my goals for 2019 was to start our own impound yard. We did that lease with the Harris Road property. That started out in January. I think we shocked Rhonda a little bit with the numbers that we have already turned in. I think it was over $12,000 in the first month.

Comments from the group were that is positive and great.

Chief Coury: We have some more work to do there. We are working with the owners out there. They are putting in a shipping trailer for us. Basically, what we have done in case you have forgotten is we no longer send our cars to the tow yards during accidents or impounds. We take everything. The only thing that goes to the tow companies is non-injury accident vehicles that they need to be towed from the scene. Everything else comes to us. From that the non-shipping trailer and what we are going to do is if it is an aftermarket product on that car we strip it off and put it in storage bin. Then when it is time for auction, we will sell that separate from what the car is. It is about making money. To me it wasn't as much about making money as it was to stop what I felt was the wronging of the citizens of Zanesville by these companies that charge outrageous prices to tow a car. Three and four hundred dollars to tow you out of a ditch is one issue. The issue of cash transactions only bothered me. The issue of saying that you tow your car on a Saturday and you can't pick it up until Monday and then they charge you two days of storage fees. It is just wrong. We went around and round with our two companies. We had

meetings with them. We set guidelines. We had them sign contracts. Some of them said they were going to walk, but none of them did. We are doing well. There should be something in front of Council in the next few meetings so we can have an ordinance passed to have a live auction. We have worked with David Wolfe and Andrew Body on that and they are in favor of that. It is cheaper than the selling that we are currently doing with Gov.deals. Gov.deals is 5% and the auction is going to be 3%. I already have three bids for the auctioneers so we are ready to go. We just have to get the Ordinance done. So, none of us have done that, but Sue has sent me some examples. That should be coming soon.

Mrs. Osborn: Are you doing the citizens academy again this year?

Chief Coury: The citizens' academy was slated to happen this spring and due to the changeover of everything that was going on in the City and we weren't sure where we were going or where we were headed so we moved it to the fall. That is one of the things I have listed for 2020. We want to continue that part of our community policing. It was very positive and I think everybody that participated enjoyed it and learned quite a bit from it. The most exciting thing we have going on right now is called Project Blueprint. The inspiration for that came from two of my police officers and basically what they asked me was they wanted to work with children in the community that they dealt with on a daily basis or they dealt with frequently. They wanted the bad of the bad. They wanted the kids that no longer had hope. Kids that were being locked up. I took that idea to Big Brothers/Big Sisters and asked them if they would be interested in partnering with us. Jenny Masterson and her staff were ecstatic that we would even ask and we said we wanted to design it. We didn't want the Big Brothers/Big Sisters plan, but we wanted our own. They ran with our idea. That helps us in a couple ways. One we have paper work that is signed in agreeance of the parents and the child and then secondly we have an umbrella of insurance from Big Brothers/Big Sisters. That way we are kind of covered if something happens. Here is what we are doing. We are meeting with these children with a couple of my officers. Four of them to be exact right now. They sit down and they talk with these young men and they teach them about being a man. They teach them about doing things right and then they are sort of a mentoring program. Then they work out with them on the CrossFit in the gym. None have touched a barbell yet. They have been in it about three or four weeks now. It starts for us around 4:30 because Dutro Fords from the citizens' academy now lets us drive the van and go around the City to pick up the kids and bring them in. Then we have donations that were made to us to buy them food if they were hungry. We could put clothes on them if they didn't have something to work out in. So this Thursday, is a day that I think some of the media might show up and talk to us and talk to these guys. Some of the people who have shown up told me they wanted it and they think they needed it. To be out in the public to show what the officers are doing. They don't get paid for this, just like they didn't get paid for the citizens' academy, they do it on their own free will. That is pretty much where we are at. It is a very positive thing that they are doing and it is pretty inspirational actually.

Mrs. Osborn: Who are the four officers?

Chief Coury: Bryan Wolfe is the person that is driving it. Ryan Harris, Cody Dent, and Marcus Pisch. They have all been cleared through Big Brothers/Big Sisters. One of the kids is sponsored

as a little for me though I am not active in that group with them he can fall in under me because I already have a little. I do that on Monday's at Zane Grey.

Ms. Gildow and others commented that is very cool.

Chief Coury agreed it is very cool. Things we planned in 2019 that we have accomplished.

- We had our second annual department meeting in February on a Wednesday, the 22 or something at Secrest. It was the second time we have been able to have an all department meeting. So, we have about 102 employees and I think 88 showed up because I still needed people to work the streets, guard the jail, and run the dispatch and a couple other things. So we had 14 not make it.
- Our Lexipol Program for risk management is what we were big on last year.
- We were redoing our policies and procedures. We are about 66% accomplished on that and we started in December and we think we should be done sometime in May. It is going to roll out to the officers relatively soon with a daily bulletin and they have to answer a couple of questions and that is 365 days a year on a daily bulletin.
- We did start our tow yard that we planned.
- We hired two Jail Administrators last year as planned.
- We moved the detective bureau into the Times Recorder building. We finally got them moved in February. That is looking pretty good. Feel free to stop down and take a look.
- We put a new K-9 car out. A new patrol car out which we had purchased I think with 2018 money, but it took a while to get the build and get the cars.
- We did our first citizens' academy.

Those were pretty much the things we wanted to accomplish in 2019.

Mr. Roberts: Does anybody have any questions? It sounds good.

Chief Coury: I don't know what is going to happen in 2020, but we are still striving to meet those goals. I have been nominated to be the Chief for District 6. So we will see what happens after tomorrow.

Ann Gildow: Do they give you whole lot of money for that?

Chief Coury: No, they don't give me any money. They might give me lunch once in a while. We will see. I was nominated last week and I have to go to a meeting tomorrow so we will see. It is the Southeast Ohio Chiefs and be a representative for that.

Mr. Sharrer and others: Congratulations.

Chief Coury: Be careful what you wish for I guess.

Mr. Roberts: Thank you, Chief. Mr. Merry, do you have any final comments for us on the Safety Division?

5:45 p.m.	Public Safety	*Doug Merry	Comments or review

Doug Merry, Public Safety Director: A few ideas:

- We talked about moving the Dispatch Center upstairs. We are looking into some funds through 9-1-1. It would make it much more secure. Before I retired two years ago that was my baby. I worked with the dispatch centers and securities. I belonged to the National Emergency Number Association quite a few years and they are really preaching that the next target is Dispatch Centers. So security for everything. We need to move it out of the front of the building to the center of the building I think is a good idea. When I took over a couple of weeks ago that was brought to me so we are going to talk to EMA and we are waiting to hear back from 9-1-1 to see if we can get some funds to help with that. Maybe we can get some matching funds or something.
- There is a space next to where my office is in the TR Building. We are talking about maybe moving the evidence techs up there to make it a little nicer for when attorneys come in to view videos they are not down in the basement. It would be a little more receptive to the public coming in if they need to get stuff.

Those are a couple of ideas. I am just kind of learning to find out what I don't know yet. It is a different ball game from where I was before. I tell the guys it is kind of like herding cats and putting out fires. I am learning, and hopefully I will be here a while. It just depends what the Mayor thinks after six months.

Mr. Roberts: Does anybody have any questions for Doug?

Chief Coury: Ohio State and OU just went to virtual school until May 1.

Rhonda Heskett: So did Muskingum College.

Chief Coury: Everybody is on the band wagon right now.

Mr. Sharrer: I make a motion that we take the same precautions in Council. Chief Coury said he would second that. (Laughter broke out)

More conversation about the Coronavirus took place prior to adjourning.

Mrs. Osborn moved to adjourn. It was seconded by Mr. Sharrer. A voice vote was taken with all in favor. None were opposed. Motion carried.

Mr. Roberts thanked everyone for coming.

The meeting adjourned about 6:10 p.m.

Susan Culbertson, Clerk

Andrew Roberts, President Pro-Tempore of Council

BUDGET HEARINGS FOR 2020
March 12, 2020

The 2020 Budget Hearing meeting was held on March 12, 2020 and began at 4:47 p.m.

Council Members present: Sandy Gentry, Ann Gildow, Joey Osborn; J. Rob Sharrer, Mark Baker, Todd E. Ware, and President of Council Daniel Vincent.

Others in attendance were Mayor Donald Mason, William Arnett, CD Director; Scott Brown, Public Service Director; Rhonda Heskett, Budget and Finance Director; Ike VanDyne, Parks and Cemetery Superintendent; Jeff Shook, Street and Sanitation Superintendent; Scott Bryant, Water Department Superintendent; Bill Rosser, Vehicle Maintenance Superintendent; and Susan Culbertson, Clerk of Council.

Community Development, Bill Arnett

Fund #300-pg 14-Housing Rehab
Fund #303-pg 14-City Redevelop
Fund #304-pg 15-CD Admin. Fund
Fund #309-pg 16-US EPA Brownfield
Fund #311-pg 16-Revolving Loan
Fund #321-pg 17-FY 19 Allocation Grant
Fund #322-pg 17-FY 17 Critical Inf.
Fund #323-pg 17-FY 18 CHIP

Community Development 2019 End Year Report
The Planning and Zoning Office of the Community Development Department in 2019 issued 232 zoning approvals. The total is 56 more than the previous year. Each zoning board received steady applications throughout the year. Some of the most prominent residential, commercial, office, and industrial development projects include but are not limited to:

- Dollar General, West Main
- Englefield Oil (Duke and Duchess Station, SR 146 & NorthPointe Drive)
- Mattingly Foods (Cold Storage Expansion)
- Menards that is going to be going up on Northpointe
- Texas Roadhouse under construction now
- Zanesville City School (Expansion of VoAg Facilities)

In addition, the following certificates and permits have been issued from the Zoning Office:

- Nine (9) Conditional Use Permit s (BZA)
- Three (3) Conditional Use Perm its (Administrative)
- Seven (7) Special Use Permits (BZA)
- 23 Variance Certificates (BZA)
- 11 Minor Variance Certificates (Administrative)
- Two (2) Temporary Use Permit s (BZA)
- 11 Temporary Use Permit (Administrative)
- 16 Home Occupation Permit s (Administrative)
- 39 Certificates of Appropriateness by the Historic Preservation Board
- 27 Certificate of Appropriateness by the Downtown Design Review Board

The Planning Commission made recommendations to the Zanesville City Council throughout the year.

The following is the breakdown of PC recommendations and approvals and a really big year:

- Two (2) Street/ Alley Vacations
- Seven (7) Zoning Map Amendments
- Nine (9) Lot Split Approvals
- Six (6) Zoning Code Amendments

The vast majority of the zoning approvals in 2019, as in 2018, involved residential improvements, such as sheds and other accessory structures. The vast majority of commercial approvals were generated through sign applications. Forty-four sign applications were approved during 2019. The total number of permits issued administratively and through various boards and commissions, is the highest since 1994 when electronic recordkeeping began.

The Planning and Zoning Office completed other notable projects in 2019 including, but not limited to: updating the Historic Preservation Design Guidelines, Landscaping and Screening Code, and Parking Standards which is probably a big deal by eliminating the minimum parking guidelines for commercial projects as folks are doing redevelopment in some of the older centers that is going to help, and the addition of Use Variances to the codified ordinances.

In addition to Planning and Zoning activities, the Community Development Department completed other initiatives designed to improve neighborhoods and encourage redevelopment.

The Community Development Department in 2019 assembled a stakeholder's group to examine housing needs. The City contracted with Bowen National Research to complete a Housing Needs Assessment, which included information for the City of Zanesville and the remainder of Muskingum County. The Community Development Department is using the document and its recommendations as a guide to address housing needs. A Zanesville City Council Housing Committee has been formed, and three of the City's Community Reinvestment Areas have been updated to provide tax incentives for rehabilitation of multi-family homes and construction of new housing.

The Community Development Department secured a one-year (1) extension to the US EPA Brownfield Assessment Grant that had been set to close September 30, 2019. The one-year extension provides more time for the coalition members (City of Zanesville, Muskingum County and Port Authority) to identify possible brownfields that could benefit from grant-funded assessment. Assessments were completed on five (5) properties in 2019, which included the site of the new Goodwill Industries facility adjacent to SR 719 and located within the City of Zanesville-Springfield Township Joint Economic Development District (JEDD). Four (4) additional site assessments are now underway in 2020 with two (2) more pending approval from the US EPA Regional Office in Chicago.

The Zanesville Community Improvement Corporation, Inc., resumed operations in 2019. The City of Zanesville provided the non-profit with $10,000 for operational expenses. The City also approved transferring eight (8) surplus properties to the CIC for disposal. The CIC completed one land transaction - the sale of a parcel on State Street. The CIC then returned the sales proceeds to the City. The City Council then approved providing an operating grant to the CIC for the same amount. The CIC in 2020 is actively seeking ways to use its limited funding to encourage entrepreneurship and downtown redevelopment.

Looking at the budget I am not going to go too far into the weeds. Thankfully, Rhonda is here in case somebody wants to do that. There are grants that run through the department; personnel and office expenses, and our contractual services. That is really what we have. We are going to be implementing our CDBG Program of work. That is our PY19 Allocation. It has $184,000 more or less and Council did approve the projects that are going to be funded through that. Our US EPA Brownfield Assessment Grant has an extension through the end of September and if we still have money available and projects that are not completed; we might be able to ask for another one year extension. That would make it a five-year grant. My hope is, and meeting with the Mayor and Rhonda earlier; is that we will be able to get through the majority of that money before the grant period ends in September. It would be great not to have to extend that one more time.

We also partnered with Muskingum County for the Community Housing Improvement Program. That has been going on for a number of years. The county will be making application for the 2020 cycle later this year, coming up in probably just a couple of months.

Our larger department vision is city revitalization through planning, neighborhood improvement, and citizen engagement. So, the Planning and Zoning team, Matt Schley and Dane Miller, are working on some code changes including updating use categories, definitions, and reviewing performance standards. So they are actively working on those now. We are also working on a place making initiative for greater Putnam. That is something Matt Schley has been working on for a while. It is actually going to be part of a larger planning initiative. The Mayor rightly so believes that projects need to link together to have a maximum impact. So rather than just looking small at Putnam, maybe it is more of a city center where it is downtown and Putnam and some of the other nearby neighborhoods being involved. So, there is going to be a significant amount of planning this year looking at those connection points and how we could really make a positive impact in multiple neighborhoods and not just in Putnam, not just in downtown, but how it all works together.

We are going to be hearing very soon, the group is actually meeting tomorrow on our Certified Local Government Grant Application that we submitted for $25,000. That would be for an update to the Putnam Historic Preservation Plan. So we should potentially hear about that tomorrow.

We also made application through Appalachian Partnership for Economic Growth for an Opportunity Zone Grant and that grant would allow us to create a prospectus to market our two federally designated opportunity zones. One being Putnam and the other being the State Street area. We are going to be working on housing as it was an issue and housing remains an issue in 2020. So, Council went ahead and updated our Community Reinvestment Area Programs for Downtown, Brighton, and Putnam. Greenwood is going through an update right now. There is work being done in the office to create a CRA in a portion of the State Street area. It would put a Community Reinvestment Area underneath a portion of that Opportunity Zone. So we are probably going to have legislation ready for Council by the end of next month to look at creating a brand new CRA. So we are excited about that.

The downtown redevelopment is still a big focus. We are in the final stages of creating and getting all the documents ready where we can move forward to create a new Downtown Redevelopment District in the 600 block. It would go from the 600 block basically north headed towards the interstate. The Community Improvement Corporation's 2020 budget has $10,000 available that we are going to put towards downtown popup shops and entrepreneurship in downtown. It will be working cooperatively with Dana Matz and the Downtown Association on that project.

Finally, we spend a lot of time talking about the historic districts and downtown. There are neighborhoods everywhere. Not every neighborhood in the city is in a historic district. Not every neighborhood is in downtown. We want to impact neighborhoods throughout the city not just these

special pockets. One way we are going to do that; and we are going to be talking to the Ways & Means Committee later this month, is the idea of creating a second Redevelopment Administrator position. Carly Campbell was in that position most recently and then I moved over. I moved up so it has been sitting vacant now for about nine months. So the work that was being done in the neighborhoods through Carly's efforts to try to build capacity and to look for different tools for helping neighborhoods revitalize; a lot of that work hasn't been able to be moved forward. There are just too many other things for me to do than the boots on the ground working in neighborhoods. So the Mayor and I interviewed four candidates recently. We had a dozen folks apply for Redevelopment Administrator. We had some really strong candidates. So, the idea would be rather than hire one, hire two; and have those two people working throughout the city on neighborhood redevelopment kind of projects. So, we will be providing additional information about that to Ways and Means later this month.

Mr. Sharrer: Is that what you want, Mayor?

Mayor Mason: Where we are getting the savings in order to fund the two is and thank you; Scott has saved us half of the money of Jay Bennett's job by doing half Wastewater and half Public Service Director. The fact is we funded the position for an entire year and most likely it will only be funded for eight months right now so as far as this year's budget just by moving the funds over it will be balanced. Going back to what Bill said, of the candidates, we had two that were really strong. One with more of a small business background that we thought could work with some of the small businesses to get them to doing more with their properties. I didn't realize this until Tim Smith told me and it was always a rumor that they were told not to inspect small businesses. Well, that is a real bad idea. So, I am hoping we can work with small businesses and get them to improve signage, landscaping, make improvements to their properties wherever they are located. The other person I really want to focus mainly on areas south and east of the river by helping to create neighborhood groups and community groups. I really want for example to start the first Saturday of every month and have neighborhood cleanup day or things like that. You really need somebody out there doing that on Facebook or a website which are wonderful, but you really need somebody out there helping to get things organized. So rather than spending money on street crews to pick up litter on overtime, I would much rather have again a community coordinator working with the public. Again, I think people take pride. Look at Putnam, they are enthusiastic. We used to have that in Brighton. Howard Frye, do you remember Howard Frye? Howard Frye was very active in Brighton and we used to have neighborhood groups on the east end. I think what happens a lot of times is people die off and get too ill, but I think with these two people we have identified and I will say this, they both are female. One is a minority and we feel that we can jump start in both of those areas.

Todd E. Ware: One of the things I have seen that is really needed in some of these neighborhoods is just having a coordinator like you said and putting a dumpster there and saying now look let's put all of your trash there instead of putting it in the alleys. I just went down an alley right there in back of Brighton as I own a couple of properties. I went down an alley and somebody put shingles there, a couch, a refrigerator sitting in the back of there. I think if we stick a dumpster and somebody to coordinate strategic locations, you have a Saturday cleanup maybe once a month, if we put a dumpster there and announce it to bring all of your trash to that dumpster as long as it can be thrown in there we will get a lot of that trash out of these neighborhoods.

Bill Arnett: That was a project that Carly had worked on in conjunction with the local Rotary Club was the effort of wanting to do a cleanup in the Brighton area. Then you have a service club and you have local residents working together to beautify, to make things better, and just because the position is not there it never moved forward. Those are the kinds of initiatives I think that if you had somebody in the neighborhoods working and that being their focus you could make a big impact with service clubs, but also getting the residents involved. They have to want to take pride in their neighborhoods.

Several commented absolutely.

Mayor Mason: I hate to compare the 1980's, but you guys know Mary Ann Huey, right? John's wife? You know, John Huey, township trustee and Village of New Concord? We first hired his wife to really be the downtown coordinator doing all of these things. That was her first job in Zanesville. She had a masters in Urban Planning. It was extremely effective and we did that because we were losing so many businesses to the mall. That is back when the mall had shops in it. The bottom line is it was very effective to have a person people knew they could call, they could help coordinate. They knew what was going on, and that is what we want to do here. I agree, you cannot have city crews picking up all the trash. It has to be the neighborhoods doing it. I mean the Putnam group is so strong and they are going to need more of our support. Frankly, I try to attend as many of their meetings as I can, but a lot of times it interferes with the Planning Commission or other meetings so you literally can't be in two places at one time. I need to have someone at those meetings because I cannot be at everything. There is a lot of energy out there in the City right now and I think we need to take advantage of it now if we can.

Mr. Vincent: So that is in the budget then for this extra position or we will need to modify?

Rhonda Heskett: The maximum strength ordinance would need to be amended.

Mr. Vincent: But also then the budget?

Rhonda Heskett: We are good with the budget right now. I had actually budgeted for one Redevelopment Administrator for the whole year and it is going to be almost half of the year before we get through to hire that person. I would imagine maybe in June or September with one of those appropriation changes we might need to increase a little bit.

Mayor Mason: We will say June because she is going August 1st. I am going to try to get all of this cleaned up before she leaves me.

Dan Vincent: We still hope she won't leave.

Mayor Mason: By the way, to make it clear, I have asked her not to leave. I want to make it clear.

Mr. Vincent: I have asked her too.

Ms. Gildow: Could we put that to a vote? (Laughter broke out)

Ms. Heskett: It is time for me to go.

Mr. Vincent: Are there any other questions about any of these line items?

Mr. Sharrer: I am going to ask the same question that I asked in the first half of these budget hearings. I am going to ask it of everybody. If the money fairy dropped off an extra $100,000 to your budget, what is your biggest wish list item? What would you spend an extra $100,000 in your budget on?

Bill Arnett: We talked about this a couple of times as we were moving through the end of last year and we talked about downtown and what could the city do to help support downtown redevelopment? If there was money available that could be put together for some sort of grant program and we have talked around about that for a while. Whether it is directly through the city or through the CIC or

whatever conduit. At the end of the day and we talk about this, Zanesville is the center of the county and the downtown is kind of the core of the city. I don't think people would be too upset and they probably would celebrate the fact that maybe the city had a few extra dollars and was able to do something downtown. I know I said and it is not just downtown and it is not just historic, but downtown is something special.

Mr. Vincent: So, beautification, is that what you are referring to?

Mr. Arnett: It could be or even something, Dan, where you are trying to specifically encourage rehabilitation of structures and trying to make sure they don't fall into disrepair and they can be reused. I mean we are working on the Downtown Redevelopment District, we have the Zane Zenith already, but at the end of the day if all would go well that would generate about $137,000 at the end of ten years and you are dividing it five or six ways so it is never going to be a lot of money for anybody. Even the 600 block if it was thirty years, it takes an awful long time for that money to start adding up before you can actually use it. If there was some other kind of vehicle or program where you could say bam, we are going to invest here and it is going to make a difference. That would be helpful.

Mr. Vincent: Is there anything else? Okay, thank you. We appreciate it.

Airport, Jim Witte Fund #601-pg 19-Airport Fund
Fund #615-pg 26-Airport Capital

Mr. Vincent: Welcome, we appreciate you coming. We appreciate this for Council as far as giving an update. I think your budget area looks very similar, but looking at things you are excited about for next year and if you are spending any additional money on something. I am sorry to keep you waiting in the hallway. Big changes in the budget then and if you have additional money allocated someplace what is that about and just going through the budget. We want to look at what is there and Mr. Sharrer may have a question for you then. If everyone will join us on page 19 for the Airport Fund and page 26. Whatever you want to share will be wonderful.

Jim Witte: Basically we are not doing a whole lot of purchasing this year as far as equipment.

- We have a new zero turn mower coming.
- We are trying to get some projects done.
    - The new electrical vault, I have a preconstruction meeting on it tomorrow. I would assume as soon as the weather breaks we will be doing that. It should not be a long drawn out ordeal. Hopefully a month at the most, to get it taken care of as it will be a huge improvement and it will save us money on electric. It is a huge safety issue. It currently is so dangerous.
- We have some other items for this fall. Three small projects which are all federal money that doesn't get released until the first of October. They are small enough we should be able to get them done as they are not too big:
    - Obstruction removal
    - Crack sealing
    - Wildlife Habitat removal

Mr. Vincent: These already came before Council. Rhonda is that part of 603?

Ms. Heskett: It is in 615 for federal grants. It covers all of this.

Mr. Vincent: Is that also part of the lighting vault?

Mr. Witte: Yes, it would be. That was all approved last year.

Mr. Vincent: There is a huge change in the budget.

Mr. Witte: Yes, it is kind of large. Basically other than that we have the pre-apps that you approved for estate monies, but that is all next year. We are good on that and otherwise that is about it.

Mr. Witte provided a brief description about the wildlife. Wildlife Habitat removal. So basically, it is an area that we don't have any fence. There are shrubs and small trees, bushes and grass are there. What we are doing is removing this coverage as one of the projects for later this year. It is just to discourage deer and everything else from coming up onto the runway around the airfield. It is a safety issue.

Mayor Mason: We thought you were removing the wildlife itself.

Mr. Witte: Sue emailed me yesterday and I was sorry I missed that meeting.

Comments from the group of Council and Administration were some thought the wildlife were being hunted. Some wanted to pet the animals. Mr. Witte said they could tie some up if desired. They have a little bit of every kind of local wildlife at the airport.

Mr. Vincent: This is proven as far as being effective for safety if you take away places that could become habitat for animals?

Mr. Witte: Yes. It is the one particular area that we are talking about. It is basically right off the end of the runway. So off the corner of it so it will be helpful.

Mr. Vincent: Is there anything else exciting going on?

Mr. Witte: I am not sure how many of you would remember Mike Roby? He was the airport manager before me for just a year and a half or two years. He actually stopped in the other day. He flies for Net Jets. That is where is has gone since he left here. He has been there nineteen years now. He looks the same. He has a very nice aircraft. He was headed to Las Vegas. This was a real nice aircraft. It is a stand up cabin. It was a beautiful airplane. It was good to see him.

Mr. Vincent: Are there any questions from Council?

Mr. Sharrer: The one question that I have and I will be asking this to everybody is if you want to put your thinking cap on. I have made the comment at different points in time, what's a dollar

mean to the budget and what's ten thousand dollars mean to the budget and what's a hundred thousand dollars mean to the budget? If the money fairy came flying and dropped an extra hundred thousand dollars in your budget, what would you do with that money?

Mr. Witte: That is a good question. I would have to do some paving. The parking lot and our road are deteriorated to a point that it is bad. That would be and I am sure I could eat up most of $100,000 on that.

Mr. Vincent: It probably wouldn't go too far. There is a lot of pavement out there.

Mr. Witte: That is just the road getting to the airport and that is not anything else.

Mr. Vincent: Is there anything else from Council? Okay, we appreciate you sticking around and coming in to see us. See you next year.

Mr. Witte: No problem, thank you.

Streets & Sanitation, Jeff Shook

Fund #202-pg 7-Auto Gas Fund
Fund #650-pg 27-Sanitation Operation
Fund #652-pg 27-Sanitation Capital

Mr. Vincent: We have Jeff Shook to share with us. His budget is on pages 7 and 27. We do appreciate all of you coming and staying late tonight for this. I will let you know Council does really value this. This helps us to have a better understanding and to get questions answered. It just gives us a better understanding of the budgets and the jump out stuff is typically when something is increased or decreased from the previous year. We hon in on that to see what is going on and why is it increased or decreased. You all share a lot of different things with us. So we might know some stuff and we might ask the same question again to help us remember. There are a lot of line items. It is very helpful to us so thank you.

Jeff Shook: If everybody wants to take a look at our paving program that starts in the spring. The 2020 Citywide OPWC Paving Program completion date is 7-1-2020 and includes Howard Street (Fifth to Underwood); all of Spring Street; all of Newark Road, Blue Avenue from Adair to Taylor; all of Euclid Avenue; Yale Avenue from Dresden to Norwood; all of Rich Street; Francis Street from Wabash to Outlet; Outlet Street from Wabash to Leonard; Leonard Avenue from Outlet to Bell; Wabash Street from Outlet to Bell; Princeton Avenue from Bell to Rich; and Long Street from Leonard to End.

Still to be bid and hoping to add the following streets to the paving list and hoping to get them done this spring also. They include Ridge Circle, Race Street, Race Circle, Luck Avenue, Gattrell Street, and Nutt Street.

I think Chip has all of that done and it has already gone before Council, I believe.

Scott Brown said that is correct. It was passed Monday night. The legislation with permission to bid these out has been passed, but the bid hasn't taken place yet.

Mr. Vincent: That is a lot of paving.

Jeff Shook: Yes. I mean paving has gone up a good bit too.

Scott Brown thought the estimate was about one point one million dollars.

Jeff Shook: I believe it is something like that total.

Mr. Vincent: Is this grinding stuff down and paving.

Jeff Shook: A lot of it is. Long, Princeton, Leonard, Wabash, Outlet, Francis, and some of them we will just mill the intersections and pave over top of them. They don't have much of a base so that will help because some of them are really soft.

Mayor Mason: Mr. President, we are coordinating with Columbia Gas trying to identify which of their lines they are replacing and a good example was they were going to replace a line on Euclid in the fall, is that what they told us, Scott?

Scott Brown: Yes.

Mayor Mason: Most likely Euclid would have been paved by us two months earlier. Now we are coordinating so that they are going to speed their schedule up so that we don't have the case of paving a beautiful street for a month and then being torn up. That doesn't mean there won't be waterline breaks or things like that, but at least we are coordinating with Columbia Gas as they replace lines.

Mr. Vincent: That is great. Are there any other utilities under there other than City utilities?

Mayor Mason: We have electric, cable, and telephone all above ground. There are some other ones and I don't remember all the details. They took our list with them and they are coming back to discuss.

Scott Brown: Chip was working with them as well. It was a great meeting just too kind of put our plan out so they could see this is what we are planning to do this year, next year, and so forth. I think from a coordination effort we are headed down the right path so we are not tripping over each other. Just like the Mayor said you are not spending $100,000 to fix a street and then they come back two months later and tear it all up.

Mayor Mason: Their engineers are actually located there at Taylor and Linden so we have a contact in a sense with a local guy.

Mr. Vincent: That is very smart so thank you to whoever is responsible for that contact.

Jeff Shook: I have never had much contact with Columbia Gas on that stuff for paving. Usually we try to keep in touch with the water and sewer.

Mr. Vincent: So you do look at that then. You meet with water and say we are getting ready to pave this so if this is a problem area with water breaks and do we need to do anything before we pave.

Jeff Shook: We give them a list. I don't know too many streets that we don't have issues with water breaks. I am not being smart or anything, but usually the ones that do try to hit is after they lay a main down through and I try to go after it as soon as possible to get it paved. That way hopefully there aren't any breaks in the future.

Mr. Vincent: I have shared this with you before I think, but some of the patching like on Maple coming up through there is pretty rough. I hear about that every time I go up Maple with my wife. She reminds me.

Jeff Shook: I hear about it too.

Mr. Vincent: From my wife or (Laughter broke out)

Jeff Shook: No.

Mr. Vincent: Again, as I have shared with you on Dresden Road when they did it at Taylor and the turn they patched. Those are very smooth. It was an excellent job. I am not sure what the difference is. Did we have different equipment maybe since then? They just did an excellent job.

Jeff Shook: Well, from the water breaks and stuff you can see where the road has dropped and it is hard to get it just right especially after we had the big breaks like we had through there. We did look at it at one time to mill it down and pave it, but I think it was like $35,000 just to do that area.

Mayor Mason: Which area?

Jeff Shook: On Maple from Sheridan up to Dresden Road. From about Pappa John's to Dresden Road.

Mr. Vincent: The milling we have had some and it was pretty rough and milled it down before paving and after it was milled it was so much better. We have had a lot of complaints down there on stuff.

Jeff Shook: I know there are a lot of complaints and I think there are two more years and Maple comes up to be paved I believe.

Scott Brown: I think it is 2022 or 2023. It is right in that timeframe.

Jeff Shook: I know it is rough through there and I do hear about it, but unless we want to spend $35,000 to mill it and pave it.

Mr. Vincent: Milling it by itself and leaving it milled is not good?

Jeff Shook: No. You would be down and there would be a lot of lose material.

Sandy Gentry asked if there is any striping going to be done on Maple. When it rains it is really hard to see at night.

Jeff Shook: We will paint in the areas that have worn off. Yes.

Mark Baker has a couple of constituents that have some alleys that are in pretty bad shape. Is there any money to take care of those? One of them is in the back of and connects Green Street with Cemetery in the first ward right there off of Greenwood. It is right in the back of the Eastend Café. It has been patched and patched and patched. It has been crumbling and crumbling. There are a series of houses that need that for access and it has become like a bomb crater.

There is another one off of Linden and I still need to check this out myself because a constituent just told me. I can give you the address as soon as I go there and check it out myself.

Jeff Shook: Okay.

Mark Baker: Is it a possibility of doing some paving on some alleys?

Mayor Mason: We set aside about $100,000 and we are using our crews for alleys and small streets.

Mr. Baker: Okay.

Mr. Vincent: We have our own paver now correct, a small one?

Jeff Shook: Yes.

Mr. Baker: If you want to check it out that would be great. I will give you the address of the second one after I check it out.

Jeff Shook: If we have three million dollars we can pave them all.

Dan Vincent: You will pave all the alleys?

Rob Sharrer: So, three million dollars will pave every alley?

Jeff Shook: Yes, it would pave every alley. We have right around 50 miles, a little over 50 miles of alleys and so we just figured it up to be a little over three million dollars would pave them all.

Mayor Mason: We paved them all, or we paved about 96% in the 1980's. It is a possibility.

Rob Sharrer: An extra $100,000 a year in his budget goes to paving alleys and in 30 years we would have them all done again.

Mayor Mason: Seriously, we have looked at alleys and small streets and that is why we thought having that crew would be beneficial. Who is the Councilperson between Winton and Kinzel?

Mr. Sharrer: I think it is Mr. Foreman.

Mayor Mason: We have talked about that one. The problem you run into is there is so much water in the area that you need to take care of the water before you can take care of the pavement. Then what breaks them up guys is the heavy trash trucks. If you take trash trucks off and you guys know that, but many of our streets you can't take trash trucks down the street because that is where people park. We are unraveling that accordion knot.

Jeff Shook: Well, when we went to Akron to see their operation they on trash day the folks were asked to park off the street in their parking spot in their drives or in the rear or wherever for that day so they could pick the trash up when they do down through there.

Mr. Sharrer: I know I was one of the biggest nay-sayers on that because in my neighborhood as I live on the corner of Myrtle and the alley in between Lenox and Locust. My personal residence I don't have another place to park. I can park in front of my house and that is it. If I leave my trash out in front of the house the truck couldn't get to it. If I leave it to the side of my house in the alley they can. The other issue that I have struggled with picking up trash in front of the house in the streets as opposed to the alleys is up the hill like Fairmont and St. Louis and those that the south end of St. Louis you would have all of those houses with some old lady trying to wheel it down a hill.

Jeff Shook: Some of them we know are issues and that is in every community. There are places where we are still going to need to run garbage trucks and we know that. The bulk of it we were hoping to still pick up from the streets. The thing of it is, Rob, the reason why is because of needles. We have had two guys get stuck. The glass: we have had guys get cut and bed bugs.

Mr. Sharrer: Throwing that weight around is not good for your guys either.

Jeff Shook: I am going to be crude, but we have a lot of filth. With everything that is going around our guys are handling it. Even though they have rubber gloves and stuff you still get stuff oozing down in your gloves.

Mr. Sharrer: It absolutely makes sense; that is for sure.

Jeff Shook: The automated system, I don't know if you guys have ever seen it work. If you go on the internet and watch it, it is a great operation.

Mayor Mason: We just need to have smaller trucks if we are going to go down the alleys is the problem.

Jeff Shook: Yes, the reason why we went with the bigger trucks this time is because we were moving the trash out in the front and we can do one route with one big truck plus some. We are keeping our smaller trucks in the alleys right now until we get the go ahead to start moving the trash back out in the front. I know people hate to change, but we have noticed by taking the trash out of the alleys and putting it in the front the alleys are a lot cleaner because people take care of the front of their house. They don't want to leave the trash in front of their house.

Mr. Sharrer: So if that one day a week if you're putting it out and something gets spilled or whatever yeah, they are going to jump out there and take care of it where the alley they may not.

Jeff Shook: We know that there are going to be places where St. Louis is one and your alley is another and there are a few where we are just going to need to go through. Every city has that.

Mark Baker: Sanitation did a trial run in the neighborhood in the first ward not far from where I live and there was a little old lady that was apoplectic because she could not get her trash down to where it would be picked up down a hill. She is like 90 years old. She could drag it out back to the alley and she came down here raising all sorts of hell and got six or eight of her neighbors all fired up as well. It was not a pretty sight.

Mayor Mason: These 96 gallon recycle containers will weigh when filled several hundred pounds because I have newspapers as I am the one guy in the room who gets the Wall Street Journal and the Zanesville paper and if you start adding up newspapers, magazines, and then now that we take glass bottles I wouldn't want a person who was elderly to try to take those up or down any hill at all.

Jeff Shook: No. That is another thing we need to discuss is the recycle. What are we going to do with it; because, I think most of you are aware that recycle is $70 a ton to get rid of and we can landfill it for $25.

Ms. Gildow: That is just not right.

Jeff Shook: We don't have a choice. We have Kimble right now is taking it, but Rob Rider when we talked with him and he has come down to $70 per ton.

Scott Brown: We haven't had a chance to really get into these conversations. What we had talked about was the idea of automation and we had some talks internally about six or eight months ago and the street and sanitation has looked at maybe creating a route where you had one truck that did automated and that sort of thing and try that out with purchasing one truck that was automated and see how it would work. There is also cost involved that we have to account for the totes themselves are fairly expensive. So we would have a couple hundred thousand dollars just in purchasing the totes. Now we have these recycle totes and they would work as trash totes, but we had a grant that paid about half of them so if we want to turn the

recycle totes into trash totes which we could; then there is a real possibility we would be paying back that grant plus we still don't have an automated truck. There are a lot of moving parts that we are as a group going to have to make some decisions on going forward.

Mr. Sharrer: So we would or do you think the grant was for the recycling totes, but it specifically stated that they were to be used for a recycle program?

Scott Brown: Yes.

Jeff Shook: Or we had to purchase them if we don't use them for that program or repay the grant money back.

Mayor Mason: Right now they are being stored in our fine garage.

Scott Brown: They are 96 gallon containers. We purchased 5,000 of them last summer and about 1,000 were distributed. About 4,000 of them are being stored. So there are still 4,000 roughly that are still basically in storage for lack of a better term.

The grant was $200,000 and we paid $50,000. The totes were forty some dollars each.

Mayor Mason: That is cheap. The recycle container I bought for my house that I bought right before you guys bought yours was at least that much and it is not nearly the size.

Ms. Gildow: Is there a plan for distributing the others or what was the criteria for distribution?

Mr. Sharrer: We need to figure out what we are going to do with them if you are not going to pay $70 per ton for recycling.

Mayor Mason: That is part of it, but the other part of it again gets down to it needs that larger piece of equipment so you can't run it necessarily down the allies and do you really want it on streets like St. Louis and Fairmont?

Jeff Shook: Right now Mayor, we have tippers on the back. So they can pull them out and then hook them to the tippers and they will dump them. They are not going to be as fast as the automated, but we can dip two carts at a time.

Mr. Vincent: This certainly needs a lot more discussion so to stay on track then. So let's go ahead and add that to the Public Service Committee meeting next time or if the agenda is too full then to the meeting after that, but it is going to need some discussion.

Mr. Sharrer: Can I ask him my $100,000 dollar question too?

Jeff Shook: A $100,000 is paving to me.

Mr. Sharrer: That is perfect. I would expect that to be your answer just throw it in the paving budget.

Jeff Shook: That is for streets, do you want to know about sanitation? I am just kidding. Anyway, another thing I would like to bring up is our leaf truck that we had built. Did any of you get to see it work? I am going to tell you what. It is really a life saver.

Mr. Vincent: The driver drives the truck and the controls are there so no one has to get out and they are not raking.

Jeff Shook: We send an extra guy just in case some people don't get them close enough and then he rakes them out or whatever. We can work it on days it is pouring down rain and everything because I hate to send the guys out when it is pouring down rain to do leaves, but it really worked out fantastic. The sign shop is complete. If you want, stop down and take a look at it. We are getting all the stuff moved into it now.

Mr. Vincent: I would like to get a tour set up for this spring.

Mr. Sharrer: Jeff or Scott real quick, I am sorry, do you guys know how many tons of recycling we have.

Jeff Shook: That varies. I can't give you an exact figure. Do you remember, Ike?

Ike VanDyne: I think about ten ton.

Mr. Sharrer: Thank you.

Scott Brown: That was before the recycling totes were put out and at that point there was no charge for taking it out to the county recycling facility and that was kind of the selling point was if we could get more people to recycle that is less tipping fees at the land fill and then as soon as the grant was written and the totes were ordered then there was kind of, I will call it what it is, a bait and switch. It went from zero to 120 and now it is down to $70. So right after we got it that is what happened; we got hit with that.

Mr. Vincent: Are there any final questions?

Mr. Ware: I would like to make a comment. Jeff and Scott, I appreciate all the work you guys have done. Every time I take the guys something they have actually went out and talked with the neighbors to find out what is going on. They have been on site and they fixed every problem and talked with the residents. I appreciate you guys.

Jeff Shook: Thank you.

Mr. Vincent: We were lucky we had a light winter. The freeze and thaw and no pot holes. Well, maybe we had some potholes. We always have them. I know the new website is supposed to have the ability to report pot holes and other issues so I think that is something really important that we need to get on as quickly as possible. I know that can cost overtime and a lot of extra work for your crews to have to come out at night.

Jeff Shook: We have where people can get online and let us know where issues are.

Mr. Vincent: Currently?

Jeff Shook: Yes. Lisa has us set up. They will come straight to my computer like pot hole patching or trash pickup or whatever.

Mr. Vincent: That is where you go on and they all go to Lisa right now, right? Okay.

Jeff Shook: Then it forwards to me the next morning.

Mr. Vincent: I don't know if Lisa knows of any way to shorten that or not, but I think if we get someone that wants to report it I think it creates some liability on our part as far as how quickly we get out there to fix it. That may change with the new system. I wasn't in on that so I don't know. Is there anything else? Okay, thank you, sir. We greatly appreciate it. Enjoy your evening.

Mr. Vincent: Scott Bryant is up next for the water department. Pages 21, 23, and 24.

Water Department, Scott Bryant

Fund #603-pg 21-Water Operating
Fund #609-pg 23-Water Capital Rep.
Fund #611-pg 24-Water Improve

Scott Bryant: I represent the group that tears the streets up after they have been paved. (Laughter broke out)

No with all seriousness there is a lot of coordination that goes on with streets between engineering, Jeff, and our department. We don't have any major projects relating to streets so that is good.

I will just kind of recap some of the highlights of last year and tell you what we have planned for this year.

- Our production was approximately 1.5 billion gallons of water. That averages out to about 4 million gallons a day.
- The Maintenance summary: we had about 156 water main breaks last year that we repaired.
- This winter it has been down significantly due to the freeze and thaw cycles we didn't have.
- In 2019 we installed 6,900 feet of new waterline that was on Marion Avenue, Venture Lane, East Highland Drive, East Willow, and Hilltop.
- This year in 2020 we plan on installing an additional 4,100 feet of new water line. Those projects are going to be on Munson Street, Chandlersville Road, and Newark Road.
- Our water tanks in 2019 we finished up the new Putnam Tank and also did a rehab of inside and outside of the Heritage Tank.

- This year we are still working on the design of the new Pioneer tank. We are in the process of making the selection on the site.
- We are planning on putting together a five year plan for our water tanks so each tank gets inspected inside and cleaned once every five years. It is EPA and AWWDA recommendations

Mr. Vincent: How big a tank is that on Putnam?

Scott Bryant: Putnam is one million gallons.

Mr. Vincent: That doesn't need to be elevated? That can pretty much go on the ground with that elevation there?

Scott Bryant: Putnam is the new one up here. Do you mean Pioneer?

Mr. Vincent: Yes, Pioneer, sorry.

Scott Bryant: Pioneer is 2.4 million gallons. We are looking to replace that with 2 million gallons. The initial design was 2 tanks with one million gallons each.

Mr. Vincent: Those will be on the ground and they don't need to be elevated any higher do they?

Scott Bryant: We are hoping to put them on the ground as it is a lot less expensive.

- Equipment purchases are last year we made significant strides in new equipment.
- This year our top priority is going to be a vac truck. We priced one out at $361,000 and some change. We are having discussions on whether to purchase that or do some kind of lease or financing. For those that do not know; a vac truck is basically hydro excavation which is a combination of water jetting and vacuum. It allows us to dig in areas particularly like downtown areas where you run into electric, gas, and sewer underground. It is a lot safer process which saves time not needing to do locates during emergencies.
- We are looking to replace dump trucks with one being a new one ton truck. The larger dump truck we have our eye on some decent used ones we are going to take a look at.
- In addition to that a loader and a new air compressor to operate the jack hammer.

I wanted to talk a little bit about staffing issues. We had ten employees that exited our department in 2019. We have had two thus far is 2020. Out of those twelve; the ten last year and two this year, we lost three employees that held a class three license. They actually retired from the Water Treatment Plant. Two last year and one that is scheduled to retire at the end of this month. Probably about 100 years-worth of experience and knowledge that is leaving us.

The other were nine maintenance workers. We had four of those workers transfer to other divisions and five other employees that left for other employment.

This winter we were kind of concerned about going into this winter as we were down three maintenance workers, but fortunately we had kind of a mild winter that got us through without any major issues.

Good news is we have three new maintenance workers scheduled to start this month so we will be up to full staff and ready to go. We currently have one posting for a class three license operator at the water treatment plant.

With that said, I want to work on developing a succession plan where we can start training some of the other employees to be able to step into some of these positions when we see people retiring and leaving.

Some major projects that were completed in 2019:

- The GIS data collection was completed for all of our water infrastructure. We are just now wrapping that up. We are going to do a couple of training sessions on the use of GIS collector equipment to maintain the system and that will happen before the end of this month. So that project will be completed.
- Our Asset Management Plan was finalized last year. The only thing that needs to be incorporated into that is the GIS data.

2020 major projects on the top of our list

- Meter replacement program that we have talked about now for a couple of years.
- I understand we are going to be meeting next week with some staff to go over a plan and discuss a new consultant. It is my understanding the former consultant we had pulled out. I hope we can get that project up and going this year.
- We also want to institute a valve exercising program that is mandated by the EPA. We have to operate all of our critical valves once a year. All other valves have to be operated once every five years. So far I think we have a pretty good handle on the GIS locations and there are about 3300 of those valves that we have ID'd in the system.
- We also want to institute a leak detection program and we hope to get that off and running sometime this year to reduce some of our water loss.
- We also want to conduct a complete hydraulic analysis of our distribution system.

Those are some of the high lights we want to get done this year. From my observation the budget appears fairly healthy.

Mr. Vincent: The contingencies then are for new water valves or water meters?

Rhonda Heskett: The contingencies at this point doesn't really have a specific purpose. So it could be, yes.

Mr. Vincent: What do we lose in a year gallon wise and dollars cost?

Scott Bryant: Gallon wise we haven't calculated this for 2019, but the year prior was about 39% according to Paul Mills' calculation.

Mr. Vincent: Is this leak detection pretty effective that you are looking to use?

Scott Bryant: I think it is a good investment. We know with a system with our infrastructure in age they are going to find leaks out there and we are going to repair them. Obviously, we are going to monitor for its effectiveness. Probably a system like ours if we contract it out; it should be contracted out and completed once per year. We have had discussions about maybe training a staff person. We have some equipment that we could use or maybe upgrade at minimal cost and maybe have a person on staff that would be able to do that once they are trained properly.

Mr. Vincent: This is sound based, I assume.

Scott Bryant: Yes, it is actually a listening device they usually start out with and go around and start on the hydrants. They listen on hydrants and the main valves. With the equipment and the experience if you have quality equipment, that operator should know the difference between a normal flow of water and a leak. Once they hear that then they have specialized equipment they can attach and in most instances can correlate where the leak is within a couple of feet.

Mr. Vincent: 39% is pretty sizeable or is that a usual average for a city?

Scott Bryant: 39% is not uncommon.

Scott Brown: No, and part of that number is that we don't and correct me if I am wrong, we don't meter city usage. Correct?

Scott Bryant: Some of the facilities we do.

Scott Brown: Like at City Hall, do we have a water meter here?

Scott Bryant: I believe we do.

Scott Brown: So that is actually better than I thought. A lot of communities do not meter any of their facilities so every place that is using water that is city owned you wouldn't account for it so it can sometimes make that number seem a little bit higher.

Mr. Vincent: So, it is a chunk of the 39%.

Scott Brown: Yes, because of our self-use; we don't charge ourselves. A lot of times the cities will not spend the money to put the meters in to account for it because you are not going to generate a bill. It sounds like at some point we have some out there.

Scott Bryant: Yes, there are a few we know of. We have the Pioneer Tank is leaking.

Scott Brown: Yes, that is going to help and will make a big difference.

Scott Bryant: You have your hydrant maintenance and flushing and stuff like that. You can take a good guestimate and assign a value to that process, but you really don't know when you

flush hydrants and your leaks and things and how much you actually use. You can label it water loss or unaccounted for or unbilled water; however you want to specify it.

Mr. Vincent: Under revenue, looking at metering and billing charges, in 2018 it was $166,000 and last year it jumped to $300,000 actual and then this year is budgeting at $170,000. I was kind of curious about the difference. Do you have any ideas?

Scott Bryant: I really had no input on this.

Mr. Vincent: This is in Fund 603 under revenues Metering and Billing Charges. In 2018 Actual it was $166,000; Actual in 2019 was $300,000 last year which is the odd as it seems high and budget for 2020 is $170,000.

Scott Bryant: You are saying it is down for this year?

Mr. Vincent: This year's budget is similar to 2018.

Rhonda Heskett: This is a calculation that is ran through the Auditor's office. So they just give me the number and that is what I charge. The $170,000 that I have budgeted could very well be conservative for this year considering it went up to $300,000 last year.

Mr. Vincent: So that is actual revenue of $300,000.

Ms. Heskett: Yes.

Mr. Vincent: Okay. Hopefully it is there again. Is there anything else from Council?

Mr. Sharrer: Yes, Scott, you had talked about 2019 and 6,900 feet of new water line and 4,100 feet of new water line on tap for 2020. Those were brand new water lines that the City put in and brought online, right?

Scott Bryant: Yes.

Mr. Sharrer: That is not replacing.

Scott Bryant: They were replacements, but they are replaced with brand new. So it is not an extension of the existing system.

Mr. Sharrer: Okay, that was my question. So, I know Ms. Gildow and I have been hammering on the condition of our water lines. Some of them I know years ago you heard the stories about them digging up the wood water lines in downtown Zanesville. Do we have a plan in place to get these things brought up? It seems to me like we should have some kind of revolving every so many years we are doing so that our water lines don't get to be 150 years old.

Scott Bryant: Yes, we have a master list of the water lines that rank in order of replacement. Then we put in I believe in our five year capital plan we had put in conservatively $150,000 in

2020 for distribution improvements, 2021 we had $200,000, and then 2022 we had $250,000, and it went up by $50,000 each year so in 2024 it was $350,000 in the five year plan worth of distribution water line and valve improvements.

Mr. Sharrer: So over the next five years basically we are going to so. Do you know what percentage of water lines in that five year time we can replace?

Scott Bryant: I can get you the footage. I have not calculated it out by percentage, but I can provide you with some data.

Mr. Sharrer: It is nice and just love the fact that you have a report that tells us.

Ms. Gildow: In the last two years they've put it in a computer program. About seven or eight years ago if you went down to Linden Avenue they had books with big sheets of paper and where you saw the red pencil marks that's where the problem areas were. So I think they have made a lot of strides since then, but clearly a lot of this is deferred maintenance. So it is going to take an aggressive replacement plan to catch up. I know in my neighborhood I saw a piece of water line pipe and it is impressive what the water looks like when it leaves your plant, it is not so good when it gets to some of the houses.

Mr. Vincent: This sounds more like a reactive plan versus a proactive plan that you are talking about here or do you think we are starting to get in to a proactive plan? Are you still looking at the highest lines as far as breakage and focusing on them and to invest. We are not at that point. We know this is an old line here and has a lot of breaks, but we are going to replace it.

Scott Bryant: I would say we are about as proactive as we can get within the means of our revenue. Obviously, Ann had mentioned, there is a lot of deferred maintenance.

Mr. Vincent: We are looking at the high break areas?

Scott Bryant: Oh, yes.

Mr. Vincent: I didn't want to overreact and I didn't mean to sound negative there, but reactive as far as fixing the problem areas and we are still there.

Scott Bryant: We have the list and we prioritize that and we have it prioritized out for the next five years. Obviously, some things do change. Maybe next year a certain line will have more breaks on it and we will move it up in priority. The whole beauty of this thing is with having the GIS system they will be able to track where we have made repairs and replaced line so all of that data will be there at pretty much the click of a mouse and we can generate those reports.

Mr. Vincent: We are still replacing like size lines so we don't have to do all the engineering to make them larger?

Scott Bryant: Occasionally we will bump the size up if we see a need and have that internal discussion with the engineering. If there is a 4 inch steel and they might say well we might want to bump that up to 6 inch so we can provide additional fire protection.

Mr. Vincent: Does that require additional engineering to do all of that anytime you do a size change?

Scott Bryant: I believe if it is more than two sizes then you have to submit plans to the EPA.

Mr. Vincent: Two sizes, that is good. I thought it was anything larger.

Scott Brown: Yeah, maybe when Scott said he wanted to do a hydraulic model that is why you would do a hydraulic model and maybe it just kind of blew over. Essentially we would pay an engineer to take our maps of our entire system and they use a bunch of math that nobody here would understand and in fact I wouldn't understand it. It just happens and through that model they are able to show us where we are deficient in size, fire flow, pressure, and all of those things and we can start to pick out and say we need bigger lines there, we need bigger lines here, but without doing that leg work first we are just kind of shooting in the dark. After talking with the Mayor, I am guessing from the 1980's is the last time any of that stuff has been done. So, here we are now in 2020 and we are still kind of shooting in the dark. Those are the conversations we have had between ourselves is that before we start spending large amounts of money trying to fix water lines, we really need to know what that model tells us and where we should be going. Right now we don't know so that is really going to be the first step. Once we get there we can come back to you guys and have much more logical conversations about how to get the best bang for our dollar based off of that information.

Scott Bryant: That information would also be invaluable to Community Development too if there is a business or commercial establishment that wants to come in you would have that data available.

Scott Brown: Right, if you have a big water user we could point them in the right direction as to where they should locate based on what they can acquire.

Mr. Sharrer: Real quickly, because I know we are way over, if you had an extra $100,000 where would you spend it?

Scott Bryant: I would put it either towards my meter replacement project or the distribution system. Either one of those would be a good choice.

Mayor Mason: Which of the size line meters would you fix first or replace first?

Scott Bryant: I would say you get the best bang for your buck on your commercial meters. Anything one inch or larger.

Mayor Mason: Four inch?

Scott Bryant: Our commercial and industrial ranges go clear up to eight inch meters.

Mark Baker: I don't know who this would be directed to, either of you two, but it struck me that the road right across the street from St. Nicholas Church on East Main was constantly getting repaired and patched and is crumbling because of the water coming off of the hill. As I recall, Jay Bennett was in some sort of negotiations with the Diocese of Columbus to put some sort of pump or reservoir, I can't remember; on Diocese land on top of that hill in order to relieve some of the water that was coming down before it could get completely repaved. Am I speaking out of turn here? Is this familiar to anyone?

Scott Bryant: The water tower project?

Scott Brown: No, I can speak to that a little bit, not specifically; the conversations Jay had, but I can explain at least so when we talk about the Pioneer Reservoir that hillside is where the Pioneer Reservoir sits and we know it leaks quite severely. How much of the water is ending up on the road comes from the Pioneer Reservoir we are not sure. The original thought was that the City was just going to build a new reservoir right where the Pioneer Reservoir is at and those are some of the conversations we are having wondering if that really is the best location and then some other options. So, I believe that once the Pioneer Reservoir is off line some of that water will go away because essentially the reservoir itself is causing some of that.

Mayor Mason: Scott, could you tell them what your recommendation is based on the numbers in terms to maximizing the low pressures would be.

Scott Brown: Sure, Scott Bryant and I sat down right at the first of the year and started talking about Pioneer and we kind of were throwing around ideas. It came up is how did we decide that we were going to put the new Pioneer Reservoir right back where the old one was. We looked at the RFQ that was sent out and that was how the previous administration wrote it up was to tell the engineer only to look at that. So, we decided maybe that is not the best approach. We went back to the engineer and we said we have some other sites so can you take a look at those. They did this hydraulic model specifically for this request so we don't have it for the whole city, but we have it for this project and what the Mayor has pointed out correctly is we have two pressure zones. We have a low pressure zone and a high pressure zone. They have modeled some of that low pressure zone. There is an old reservoir site that we affectionately call Blandy that has been mothballed for a long time. Then we have another site where we have current towers that they call Mitchell. So, we asked the engineer to take a look at Blandy and to take a look at the Mitchell site. They have come back to us and have explained that there is marginal difference in the amounts of pressure that either one of those sites would create in a low pressure zone as opposed to Pioneer. The problem that we were running into with Pioneer is that we would have to purchase property which is owned by I believe and not sure if it is the local church or the Columbus Diocese and then we were going to have to build a new road, excavate that hillside about 20 feet that was going to force us to put in a concrete tank which is about the most expensive tank you can put in and then backfill it. The Mitchell site is flat and would not require all of that work. Then the Blandy site is empty so we wouldn't have the complications of trying to operate an existing reservoir while digging right next to it to put in a new one. So, we are going to meet next week to go over all of those

options with the engineer on cost and all of those sorts of things and then we will be able to come back to all of you with a more logical conversation based off of all of these facts this is where we think we should put it.

Mayor Mason: So basically, Scott and Scott are coming up with a recommendation on a site that will number one save money, provide marginally more pressure, and frankly not have to disruption of service during construction. They did a nice job thinking that through.

Mark Baker: It is all about shutting the old reservoir down and making sure if is cost effective where it is going and that you have run tests to determine pressure.

Scott Brown: That is a great way of putting it, yes.

Mark Baker: Great, thanks!

Mr. Vincent: It is about saving money and considering using these other locations, to me up there with the Pioneer tanks where the big swimming pool is located is a beautiful park like setting. It is just beautiful up there. If we could reclaim that and I know we have too many parks and we don't take care of them, but that is a beautiful place up there.

Mrs. Gentry: May I ask a question? I know it is going off of what we are talking about. Over on Forest Avenue when it rains it is like soapy water runs down the drains, real soapy. It has big bubbles in it. I have seen that in other areas now sense. There is kind of a dip in the road there and water lays at the intersection. There is always ice in the winter piled up in the road. What is that to give it the soapy look?

Scott Brown: That is a good question. I don't think without seeing it myself I can offer an answer. I will have to look at it.

Mrs. Gentry: Maybe sometime this summer if you are over you can look at it.

Mayor Mason: Which side of Blue?

Mrs. Gentry: The Sheridan side, Sheridan and Forest and those areas over behind the Dairy Queen.

Mayor Mason: That tells me it might be a sewer line broken.

Scott Brown: Yes. We need to look at it.

Mrs. Gentry: It has been that way for quite a while now.

Mayor Mason: That means a sanitary sewer line may be broken.

Mrs. Gentry: I wasn't sure what was happening, but thought I should mention it.

Mr. Vincent: We will get it checked out. Thank you so very much. We appreciate your time and have a good evening.

We are moving on to Parks and Cemetery. We are running behind. We will now hear from Ike VanDyne.

Parks & Cemetery, Ike VanDyne

Fund #101, Div 3281-pg 2-Parks
Fund#101, Div3961-pg 2-Stadium
Fund #602-pg 20-Cemetery
Fund #850-pg 35-Cemetery Development
Fund #851-pg 35-Cemetery Endow.

Ike VanDyne: I am kind of a Council Rookie so this is my first one. I took the position back in September as Superintendent of the Parks and Cemeteries. I will give you some of the park projects that we had from last year that they had started.

- Goddard Park was one that Jeff Johnson started to refurbish and fixup the appearance of it. We took 15 trees out of there. We are wanting to put new benches in there with this budget, new playground equipment, and redo the basketball court there. I talked to the Mayor about it and he said let's finish it since we started it. Let's get that one done and then we are going to move on to another one.
- Merrick Park down off of Chester Street will be our next one that we are going to work on.
- The playground equipment just for Goddard Park is over $40,000 just for the one set. That is the answer to your question, is $100,000 and I would start replacing playground equipment.
- The appearance of the parks is a high priority that we set this goal. He has made it clear that is what he would like to see so that is what we are going to do.

The cemeteries also.
The Dog Park at Riverside

- We planted 32 trees there in November. Most of that was donated through Mike Alfman and the organization that he is in charge of.

Mayor Mason: What it was is Stephanie Winland, Stephanie Winland Landscaping sold the trees at cost and then Mike bought them.

Ike VanDyne: Winland's donated the installation of those trees.

- Since 2016 $57,000 has been put into the dog park. The city has put $20,000 and the organization has put $37,000 into it.
- We financed the fence around there so that is what we took care of.
- I talked to Scott a little bit about maybe for $6,000 and we talked to Jeff Shook with their paving crew we could pave that trail in both of those.
- Mike was pretty happy. He said he may have some funding that could help go toward that if we couldn't come up with the $6,000.

Zane Landing

- Last year we repaired the apron that goes down to the Lorena. We replaced all of that as it was a trip hazard and it needed to be taken out and replaced.

Shelters

- We had 122 rented shelters last year in our parks. So they are being used.

Positions

- We filled a position in the parks so we have an extra person now.

Vehicles

- We got a new one-half ton truck last year in November.

Since I came into the parks that is pretty much what we have done.

My goals for the parks for this year like I said are park appearance. This is a high priority.

We are looking to purchase another ¾ ton dump truck to pull our equipment with a plow so we can plow and salt our parks with it and use it for our cemeteries also.

We also want to buy or purchase a 72" zero turn mower that will take care of Putnam Hill. You have seen the hill there and it is a little nerve racking on the zero turn coming down that hill. So we demoed the Cub Cadet probably six weeks with the steering wheel. You guys have seen the new zero turns with the steering wheels. They hold the hills exceptionally. So I got with Billy and talked to Ryan so we want to purchase one this year for our parks.

We have taken back over Armco Park Ballfields. We spent the last three weeks redoing those fields and diamonds 2 and 3. The Zanesville Girls Softball Association is taking it over. I think they have it until the middle of August.

Scott Brown: They reached out in January and the lady that runs that organization contacted me directly and said OUZ is giving us the runaround and I really need some place for these girls to play. We had a quick conversation with the Mayor and he said yeah let's do it. So we have a real simple contract with them. There is no money exchanged. It is just a use agreement that the Law Director put together we have the place in playing condition and so those girls are going to have a place to play all spring. It is 8U, 10U, and 12U.

Mayor Mason: This satisfies something we really want to do and always have. Youth softball run by the city is sort of run in the same style as our adult softball where you sort of have a commissioner and they just frankly; they run it themselves and we are in charge of making the fields look nice. I am excited by it. By the way, Scott and I had conversation with the leadership of AK Steel a week or so ago about renewing the lease for two more years at the same $1 in terms and conditions. We would like to go that direction. They would also like to talk to us about selling us the property at some future time, but we felt until Cleveland Cliffs stabilized and we knew what was going on we didn't want to really talk about that issue. We just went with the two year. I like what Ike is doing down there. He is using his people to actually do maintenance. Go ahead and tell them about that if you would.

Ike VanDyne: We tilled the diamonds and we disc them. We let them sit. We came in and we put some sand and top soil and a diamond conditioner on it. We have repaired the backstops. We replaced the fence. We put wings down each side of the 1st and 3rd base sides. Actually it was material that we had from Gant Stadium as we had to replace 205 feet of fence there already from where the wind had blown it over. It was a temporary section that they removed for the Rosecrans football when they would go in there and play football. It just got worn out over the years of putting it in and out and the wind took it. I saved those panels and luckily we had use for them down at Armco. I have feedback from the lady who is in charge of that youth league going in there and she is quite happy with everything that has been done there.

I have turned the infields over to her. They are putting their own bases in and we will maintain the grass and stuff. We will assist her if she needs anything in the future.

Ms. Gildow: It seems like parks are things that Council hears a lot about. I don't know why they get so much attention and so many comments relative to all the other things the city provides, but I think a little

time, energy, and maybe a few dollars put into the parks is going to be very well received by residents in Zanesville.

Ike VanDyne: We also want to purchase an attachment for our tractor that we have at Riverside. It is called a batwing mower. It is kind of shaped like a bat. The wings come down for 12 foot to mow the well fields there and we can also use it at Armco. Before we were just doing patchwork with the staff we had. We could never get caught up with getting all the mowing done. We are trying to buy the equipment so when we go out we can at least get it done and start over the next week instead of having stuff left over from the previous week.

The previous mowers covered 60 to 72 inches. The zero turn mowers really aren't designed for those great big fields like that. We want to get the equipment suited for the job. We hope this will cut the time in half or close to it.

Bike Trail

- Also on the bike trail we need to put new fencing up in certain areas. We have people cutting our fence so they do not have to walk all the way around. They come in from one point and they take the time to cut that fence. I talked with Scott and he came up with putting an offset gate in there. We have replaced that fabric over and over. We have already done it three times since September since I have been there. They have it cut in six different places from Zane Landing to Riverside.

Mr. Sharrer: So you are going to put those offset gates in those six locations.

Ike VanDyne: I am going to do three spots. I don't want to convenience them that much.

Mr. Sharrer: I am just thinking if you; obviously, if they are continuing to cut in those six spots then it makes sense to me to take that part and make a gate.

Ike said he is going 300 yards. To me it takes more time to cut that gauge of that fence than it does to walk around it.

Mr. Vincent: If you put a trail camera in and try to prosecute these people who are costing us money.

Several agreed.

Ike VanDyne: Also we want to pave 400 tons of the bike trail this year. The bike trail is three miles. My outlook is to do a mile for the next three years to get it all done. That is mill down the humps that are in there and again Jeff Shook said he would bring his paver in and it would cost us $67 dollars a ton compared to $110 if we subcontracted it out. His guys have done Riverside midway through there for us and they do a real good job. It will look nice when they do it.

Mr. Vincent: So, we have our own grinding machine?

Ike VanDyne: We do. We have it on a bobcat.

Scott Brown: It is not a real big one like you will see the Shelly & Company use on I-70, but it is ideal for that kind of work.

Mr. Vincent: You will just grind the high spots and not grind the whole thing.

Ike VanDyne: Right, just the high spots and I would like to put an inch and a half on it. It is about 400 ton to do that mile this year. I would like to start at Zane Landing and go and if there is money left over or if Rhonda is kind enough then we will go farther.

Another goal I have is Riverside.
Back in the 1980's when I played, Riverside was one of the top complexes in the state. It has really gone down. I am not blaming anybody, but over the years, it has really decreased. I would like to start paving that parking lot. We are working on the ditching out there for the flood area. Scott's crew in the sewer department have already started helping us out to try to at least eliminate the length of time that water lays there. Now, it is never going to stop the problem because when the river is up higher than the culverts it brings the water in so you can't do anything about that, but at least if we can get that stuff cleaned out the water may not be there as long. I need about $10,000 to pave that parking lot out there.

Tree removal
We have a lot of trees that are dying that are in the parks. They have become safety hazards. I have taken Scott to one of them. Chaps Run, a lot of trees need to be removed out of there. Before we go putting a lot of money in playground equipment there we need to take care of that. We need to get the trees that are going to damage the equipment and plant some new trees. Get it opened up and plant some new trees, put some benches around, and then we will talk about some new equipment in there.

Ms. Gildow: Chaps Run is still or there is some sort of designation because of I don't know if they got grant money or what and it has been decades ago, but Chaps Run has a designation that restricted us on being able to do things or change a lot of what was going on there. Is that still in existence?

Ike VanDyne: Is that because it is a flood zone?

Sandy Gentry said it is a wetland.

They traded another area.

Ike VanDyne: I am not sure what is going on there.

Mark Baker: To equalize wet lands basically.

Ann Gildow: So that restriction's been lifted then.

Dan Vincent: You traded one area for another.

The Clerk said she thought it was moved from another location to Chaps Run.

Rhonda Heskett: She thought it was moved from within Chaps Run from one area to another.

The Clerk stated the playground area is not included as it is higher.

Ike VanDyne: The bottom section of Chaps Run has been closed off. We haven't been in there for years.

Scott Brown: That doesn't make sense that they just left it as undisturbed wetland. The top area where it wouldn't be wet is probably a park area.

Ann Gildow: There were some rather exotic trees and things like that planted in there at one point in time. Now, I think the poison ivy is gaining on it, but I know when we did a Chaps Run clean-up, which has been a long time ago, we had to be really cautious no to disturb a lot of things, but I didn't mean to digress, but I wondered if we were limited to what we could do there.

Ike VanDyne: We can research that.

Mayor Mason: Doesn't part of Chaps Run enter at Cuddy Dixson? I am trying to remember.

Sandy Gentry: No, Cuddy Dixson's down off of Hedgewood.

Mayor Mason: I thought the other end of Chaps Run was at Cuddy Dixson.

Ike VanDyne: Chaps Run was a two tiered park at one time. All we maintain is the top part.

Ann Gildow: It is a high crime area. What prompted the cleanup back in those years was that the neighbors were complaining that there would be a crime and the perpetrators would duck into Chaps Run never to be located again.

Mr. Vincent: Is there anything else?

Ike VanDyne: My cemeteries if we could.

- Last year we did 58 interments, 39 lot sales, and we took in $78,582 into cemeteries.
- Last year was pretty much a lot of maintenance in the cemeteries with the mowing and burials.
- This year I would like to do some paving in both cemeteries.
- Drainage in both cemeteries for stormwater.
- We are looking to put a columbarium in Greenwood. This is for cremations. We have one at Woodlawn which is a 72 unit which cost $15,000 back in 2016 to put it in.

Mr. Baker: What is the fate of the house that used to be the groundkeepers house six or seven years ago in Greenwood?

Ike VanDyne: That is the office building.

Mr. Baker: So they are just using it as an office building.

Ike VanDyne: That is another thing we would like to do is to look at rebuilding an office or reconstruct because it is pretty worn down.

Mr. Vincent: Okay, is there anything else on cemeteries?

Ike VanDyne: Tree removals, we need a lot of tree removals. We already had the tree commission go through and take a look at a lot of the trees that need to come out. As a matter of fact the day after I rode through one of our big trees fell down the next morning. We spent the whole day cleaning that up. It is one we do not have to pay for. We will contract it out because there are some huge trees.

We had an operator position filled in the cemetery. We are getting some extra seasonal employees. I talked with Darla. We have six on board already out of thirteen that we are allowed for parks and cemeteries.

Mr. Vincent: Okay so you are getting all ready for Memorial Day. That is a big thing for the cemeteries. Do you have a plan for that?

Ike VanDyne: Yeah, we will have all hands on deck. We will have extra help from other divisions if needed. Hopefully, we can do it and take care of it ourselves and take care of it in house.

Mr. Vincent: Okay, is there anything else?

Todd Ware: At Putnam Hill Park, is there some type of fencing you can run along that street, I think it is Grandview because there are three guys who live in those houses and they have four wheel drives and 4-wheelers and they pull up in that park and are tearing it up. I know that is where they are coming from because I live less than a block from there.

Ike VanDyne: We had the police over there and had one of the vehicles removed where they park up in our yard. We haven't seen it back since then.

Todd Ware: Have you seen the track marks?

Ike VanDyne: I have. It is torn up. They are going to be doing some work when they do Dug Road. That park is going to be disturbed.

Todd Ware: I would like to talk with you on that to discuss the design plan.

Sandy Gentry: Going back to the parks, off of Jackson Street, is that Merrick?

Ike VanDyne: No, Merrick is down off of Chester. Keane Street is over by Merrick.

Sandy Gentry: That Park is well used in the evenings in the summer. There are always people there eating dinner and different things. There is a cement section that faces the back of that. It is a round built in cement thing and it has a spout like for water to come out. It has like a little ledge for seating. Could they possibly check that out to see if they could get water there? That would be a beautiful little sprinkle thing for the kids to play in a water.

Ike VanDyne: I asked that question to Mr. Bennett and I thought he said something about a liability with water being put in there. I am not sure. I don't know, but I asked what that was.

Mrs. Gentry: It wouldn't be that deep. I think a lot of families in that area would use that and it would be a very nice thing for that area. Very nice.

Ike VanDyne: I will look into that for you.

Mrs. Gentry: They keep the restrooms closed there because people just tear them up and everything. So they put a port-a-let there.

Mr. Vincent: Thank you, sir. We greatly appreciate it. We will move on to Vehicle Maintenance with Bill Rosser. This will be on page 28.

Vehicle Maintenance & Equipment, Bill Rosser Fund #700-pg 28-Veh & Equip Maintenance

Bill Rosser: Good evening.

Mr. Vincent: Do you have everything running smooth? You have some amazing people down there.

Bill Rosser: We are trying. We had a pretty mild winter this last winter. Hopefully we can get caught up a little bit.

- We are pretty well on track with our seasonal equipment and getting it out there before the nice weather hits.
- As the other departments have said last year was a lot of new infrastructure and purchases on equipment that we really needed. If we can keep up with that plan and get some new and out with the old it is going to help us keep up with the repairs a lot. We are doing really well with that. We have quite a few of them on for this year.
- Last year, unfortunately, we didn't get to do quite as much as we wanted with our building, but we are moving forward this year with all of our capital improvements like relighting the building, buying some shop equipment. We are fixing the building up and making it a little easier and better to maintain the equipment.
- We did a bunch of training last year. A couple of us got the emergency vehicle technician training to cover the police and fire vehicles.
- I got my ASE's for Automotive Service Excellence for the lighter stuff. We will send a couple more people this year to get that done.

Besides that we are just plugging away and nobody is walking.

Mayor Mason: One of the things Billy was talking about was hiring a couple new maintenance people this coming year. We have talked about the fact that no one here is certified for Chryslers and Dodge and things of that nature. So, it is interesting when you see the bids go out you will hear whether it is the Chief of Police or the Fire saying we don't want to look at Dodges because we just want to go toward Ford's because that is what our certification is in. So rather than training our people who might retire soon we will talk about the new hires and having them certified more broadly in these areas. In fact, we can receive the lowest and best bids from Dodge and Chrysler too. I have also asked them to reach out and you guys can appreciate this. We buy our tires locally, but through the DAS plan. Not all the small mom and pop such as McMillan Tire, know how to do that. I know he has called Mc Millan's to try to bring them up to speed. It is too bad we can't buy our papers and pins from Staples which is again a local business. There is no Business Equipment any more, but we at least are able to buy tires locally.

Bill Rosser: We try to buy as much as we can locally. We buy local if we can get it.

Mr. Sharrer: Billy, what about the extra $100,000.

Billy Rosser: If I had an extra $100,000 I would do building improvements, shop equipment, and training. It used to be you guys can be familiar with it used to be if you were a mechanic you had grease all over you and under your fingernails. Now, we spend more time with a lap

top in front of us hooked up to a truck. We do that more than anything. The technology is overwhelming. The Mayor touched a little bit and I don't know how to say it politically correct. I guess, but my boys are getting older. Some of them including myself are stuck a few years back and it is harder to keep up with the newer technology. I believe some younger kids could come in here. I have a son who does the same thing I do and he comes in and jabbers off stuff he does on these trucks and I am just shaking my head. He is 20 years old and he is ahead of me on technology. There is a lot of training and I would get a lot of training.

Mr. Vincent: Building wise, and I am not clear where it is right now. You are moving to the newest building we purchased? Or not?

Billy Rosser: No, we are not.

Scott Brown: No, what we did was Vehicle Maintenance is staying put and then the Water Maintenance is basically using the Frueh building as where they are parking their trucks and all of those sort of things like that. Then the goal was long term to look and see down the road if we can relocate water maintenance on the same campus as the water plant is now to have everything on one campus. So, the current building where they had split use, for lots of reasons and I will let Billy explain was better suited for Vehicle Maintenance to grow in as opposed to trying to go over to the Central Avenue building and set up a whole new shop.

Mr. Vincent: Part of that was they could get a fire truck in there so they didn't have to work out in the weather. So that is still the case then? If you have a fire truck you still have to work outside?

Billy Rosser: The square footage of the building if you had to have for instance ladder truck one and we had to work on a ladder in dead winter we were outside. We could not put it in the building and set it up and stretch it out.

Mr. Vincent: The Frueh building was supposed to take care of that, correct.

Billy Rosser: It was, but it wasn't quite the right square footage. If you set it up in there you could extend it all, but short about 30 to 40 feet from extending all the way out diagonally across the building. With the 80 by 90 at the rear of the building which the water department used to park their equipment in we can go to the front corner and diagonally stretch it out and we probably have about a foot and a half before we hit the next wall.

Mr. Vincent: So you have a lot more space and you don't have to move one vehicle out you don't have to move three other vehicles out.

Billy Rosser: Scott and I talked about it and we lost a little bit in the morning and a little bit in the evening when we shared the building. The back half was where we did most of our PM services. We had a smaller hoist for the police cars and stuff. We hit the ground running usually around 7:10 after they got their orders and got started. Well, the water department might get their orders around 7:30 so we either have to move their equipment out so we can

get in the back part of the shop or we have to wait on them to do it. They come in the evenings and park before we are done so we move their stuff around. It is all gone now.

Mr. Vincent: So it is progress. It is just a little different than what we were sold.

Billy Rosser: We got energy saving lighting. We are going to get rid of the old mercury vapor lights and we are going to put in all new LED high bay lights in the back. Since last year, I think we purchased a waste oil furnace. Not sure if you have heard of it or not. It takes the engine oil and burns it. That thing is amazing. I think that will cut our gas bill in half. We won't be using any gas. A lot of building improvements and that is what we need.

Mr. Vincent: Are there any questions from Council? Okay, thank you. We appreciate you sticking around and sorry to keep you so late. Try to enjoy the rest of your evening.

Sewer Department, Scott Brown Fund #604-pg 22-Sewer Operating Fund
Fund #610-pg 24-Sewer Replacement Fund
Fund #612-pg 25-Sewer System Construction & Engineering Fund

Scott Brown: A couple of the big things we have in the Sewer Department this year:

- The Linden Avenue Lift Station has had legislation come through. We will be bidding that out in late April or early May.
- We are hoping for completion without the punch list done by December, but I am hoping that we will have it in use by December. We may depending on weather, we may have to come back in the spring and do some of the punch list items, but that is the goal with Linden Avenue.
- We went through as every couple of years the EPA comes out and does an inspection. We passed the inspection with flying colors, but they always have to give their two cents. One of their inputs was they thought the City should realistically be able to clean the entire sewer collection system in a five year period. So I sat down with our GIS Department to divide the City up into five sections based off of flow and let's see what that is going to look like. So we have done that and we have gone back and implemented that process.
- We also as some of you may remember purchased a new camera van. So what we are able to do now is actually clean and televise to verify the condition after we have cleaned. So the nice thing is they are out in the field now and are able to use tablets. That information gets uploaded and goes right to the GIS. So we are tracking all of this stuff that we are doing. So, in theory when the EPA comes back and says are you doing? We can just pull it out and say yes, this is where we have been and this is what we have done. This I what we found. So everything will be nicely documented.
- We found a lot of manholes that we didn't know existed because they were paved over. It happens all the time. They do a paving project and they didn't want to wait for someone to come and raise the manhole up as they were too busy so they just kept going. Then you go fifteen years later and nobody remembers it was there. So, just in a short amount of time we found quite a few of those.

- Sometimes with our maps we thing something is going one way and it turns out it is going another. So, we fixed a lot of errors on our mapping system already so it is paying dividends just by doing that.

Mr. Vincent: In GIS once it is located every manhole cover is then entered in?

Scott Brown: Yes, it is called a way point. So yes, it grabs that latitude and longitude data and it is entered into that mapping and then that mapping is used as a standard for that system that we call ESRI. It puts the information and then plots it on that and it is good then and always there as it knows what latitude and longitude are.

Mr. Vincent: It is accurate then to how much?

Scott Brown: Our system is within inches. Our manholes are two feet across and where that kind of accuracy is really important is a lot of times in water they are looking for a water valve that is that big around so if it is off by a foot you are not going to find it. So, being able to locate it within an inch or two is pretty important. So, we do have the technology and it just keeps getting better. We have implemented that.

Stormwater updates

Scott Brown: We are also spending a lot more time doing the exact same thing with cleaning and televising and mapping. This is something the EPA said this is part of our permit and you were supposed to have mapped your storm sewer. We really didn't have any of that data so we are really starting from scratch. We are working with our GIS Department and Engineering Department and we are slowly building that inventory of all of our things. It is amazing when the guys come back in at the end of the day and they are like you won't believe what we found because none of us were right.

So, we are making a lot of progress in a really short amount of time with both our sanitary collection and our physical storm infrastructure.

We spent a month up on Northpointe. If anybody has had an opportunity to drive up there at the intersection of Northpointe and Fairview. It is all in the city where all of those open ditches are our responsibility. They hadn't been cleaned in about eight years. So we spent the entire month of February. We rented a large track hoe from the Caterpillar out on the East Pike. They dropped it off and we used it. They came and picked it up and took it away. If you get a chance to go up you will notice a huge improvement. The water instead of sitting there now flows where it is supposed to go. Not only is it important for the water getting out of there just for those businesses, but it is important for the road. If the water doesn't leave it just sits there and destroys the road. You get a lot of heavy traffic there. We really made some improvement there in that area.

If you think of Kelloggs and we have a fire station that is currently being used by the gas company and now Patriot Welding is on the other corner. We were not able to do anything further east.

Mr. Sharrer: He thought part of it is privately owned, isn't it.

Scott Brown: Yes, and we as a city didn't put in Fairview and I think the township did. The drainage wasn't laid out correctly.

Mayor Mason: It was there before we built the industrial park.

Scott Brown: So there is no infrastructure there and it can be done, but it couldn't be done in a week with a track hoe to fix it. So, it would take a project to fix that. So that section on Fairview in front of Patriot; unfortunately, the asphalt is cracked and not in great shape and the water doesn't leave properly but it is because of the lack of infrastructure that is not easily fixed where we could just cut a ditch. The way the land lays there it wouldn't allow for us to do that. We would need to actually put in storm drops and put in hard piped infrastructure to move the water. It can be done, but not something that could be done by just moving some dirt. Everything else up there we did just by digging out.

We have the Brighton Avenue sewer line project that was actually advertised today as the first day. My goal is to have that project completely done and have them out of here before the fair. So, that area every year is a problem child for us right around fair time. So I am hoping to have that fixed in time for the fair. That is our goal.

If I had an extra $100,000 I would do more lining. More of that lining like we are doing in these historic areas where we don't want to tear trees up. There is a lot of old infrastructure in historic parts of the city with a lot of old growth trees that you cannot blame the trees. It is not their fault. What else would they want? They have any area where they have all the nutrients and all the water they could ever want in the world in the sewer pipes. So, where else are they going to want to be? So, if we can line those sewers and keep them out of there it will solve a lot of headaches. So, on top of cleaning and televising and doing that sort of thing if we could get to the point where we could start to implement an annual lining project. $100,000 is roughly between $85 and $100 a foot typically the standard number. Where you are looking at more around $45 a foot to dig it and put in the pipe. So, you can do a lot more if you dig everything up as it is, but you tear up all of the trees and you destroy things. So, that is the advantage. It is more expensive, but you have much better preservation.

If a pipe is 100 feet in diameter it is going to cost a lot more money, but the standard sewer pipe is an 8 inch diameter sewer pipe. The going rate for installed is roughly around $45 to dig and install. If you are doing a small project there are fixed costs that drive it up, but just the standard project that you are replacing sewer line if you are going to do one mile of sewer line so 5,200 feet you could figure somewhere around $45 a foot is what it would cost to have it installed versus $90 to have it lined.

Those are some of the things I have been working on in the sewer department.

Mayor Mason: God bless him. He is only getting paid about $60 extra dollars gross a week doing both jobs. I want you to know that.

The group was shocked to hear this.

Mayor Mason: He has to do 20 hours at the Wastewater Treatment Plant and 20 hours as Public Service a week. When he accrues overtime, I am not sure he has any. It would be done at the WWTP level even though it was working on Public Service. Our system doesn't work well.

Mr. Vincent: But the personal satisfaction is priceless, right!

Mr. Brown: Absolutely. We are getting a lot of great things done so I don't have any complaints. There are a lot of fun things.

Public Service Director Scott Brown comments or review of Public Service

I really enjoyed working with the superintendents on what we have. I don't know what questions you might have from a Public Service standpoint. The Mayor and I have some goals that I won't rain on his parade. I will let him roll all of those out, but here are some projects from a Public Service Director's standpoint.

- Gant Stadium, we are still plugging away at that. It hasn't gone away. It is still working in the background. We have met a couple of times now with Strand and Associates, our engineer. We have some questions for the Old Timer's Association. The Mayor is going to spearhead those conversations once we get some direction there so we can kind of come back to the table.
- Dug Road is advertised for RFQ's. Gosh, this is going to seem incredibly slow, but in the world that we live in it is going to be very fast. We are spending the entire month of March advertising for what they call RFQ's (Requests for Qualifications). Which because we are going to be spending over $50,000 the State of Ohio says you have to go through this RFQ process. I am sure you are all familiar with it. So then we will get those back right around the first of April and we want to score them and select the best firm. We are hoping by June 1 we have all agreed and know how much it is going to cost and we are ready to be at the contract stage; we are hoping. That is when Council is presented with legislation and the sooner it gets passed the sooner we can execute the contracts and the quicker we can get off and running. It is going to take about six months to design it. All options are open including a bridge. I don't know that is going to be the cheapest option, but that is what we are hoping for is some innovative and rather genius people to come to us and have some great ideas on how we can fix this problem. Based off of their genius is how we will score these projects and go from there.

Mayor Mason: What we have done is said here is our problem and how would you fix it? Instead of saying, here is our problem and here is what we want you to do. It is much like what Scott and Scott did on the water tower. Instead of saying how would you put a water tower here, they asked for ideas and were open to ideas. This is why Scott's referred to as the million dollar man, because he saved us a million dollars.

Scott Brown: So let's say we have the design and everybody is happy with it on January 1 of 2021. Then there is going to be that bid process and funding process so that is going to be a three to four month window realistically. That is fast. That is having the project bid, accepting the bids, and having the money borrowed, online and ready to go. As soon as we say how much it is going to be and execute those contracts is probably going to be around April 1 and that is a fast timeline. Then we are still looking at about a 12 month construction window from April 1 of 2021 to April 1, 2022. We are hoping that road is open and ready to go because we have been told by ODOT that by April 1, 2022 they are shutting down the on ramp from Maple onto I-70. That is what is driving this project.

Mayor Mason: We think more traffic is going to go Linden to the Y-Bridge and again as I mentioned last week, with downtown traffic being lighten north/south and south/north you can't get traffic going east and have any level of consistency. So they are going to go Pine and Dug Road and this is going to be interesting.

Scott Brown: ODOT through Chip's correspondence has relayed to the City that roughly April 1, 2022 is when they think that project on I-70 will get to that ramp and have it shut down.

Mayor Mason: The project will actually start in about a year, April 2021.

Scott Brown: Yes, they have State Street and something even west of State Street they are doing.

Mayor Mason: As you are headed east bound they are going to widen the exit ramp going back to roughly the Licking River. So, they will widen as it currently is such a short exit ramp to get off on State Street. They are going to widen that starting back about the Licking River. That will give people a lot more time to slow down and get to a good speed.

Scott Brown: So those are two big projects. Obviously, the Pioneer water tank is another one I am working on. Then some of the things Ike and I have been working on are I think we have 2021, 2022, and 2023 or somewhere around there of plans for parks. We are coming up with this idea of maybe we want to have some themes and I don't mean like having Mardi Gras themes; I mean like in other words of an idea of like whoever came up with the idea of having pickle ball at one spot and that sort of thing. So, what do we do with our inventory of parks and that sort of thing?

We do have a Tree Commission and to their credit they don't like cutting down trees which is fine except; unfortunately, there are times we just have to. Then they want to build up that inventory. Is there a park where they want to set up a grove or something that is designed where people go and they walk through and it is a fifteen minute walk and they get away from life and they come back to their cars and they go? Those sorts of things that we can do with our inventory of parks. So, those are some of the things I think that I am hoping we can start to roll out some of these ideas with all of these different assets that we have.

The Canal is another project that we are really close to having completely designed. I will let the Mayor explain his ideas with ODNR for funding. That project is one I have been working

steady on for the past two and a half or three months and pushing it. I have a meeting tomorrow with the engineer to discuss the construction management costs to have them oversee it. Once we have that figure then basically that project is ready for advertising and bidding when we decide to do that.

Mayor Mason: What he is talking about is ONDR has some match dollars so what we were hoping to do is take our roughly $195,000 or whatever it is and then Rotary has between $20,000 actual and $20,000 more in pledges and trying to maybe match that against ODNR money. Now the issue is since ODNR owns the underlying fee the question is will they still consider this a grant to us? ODNR uses this same pot of money for their own projects, but that is what we are trying to work on so we can double our money or half of our money. We know a few people at ODNR. The problem you run into is it is really crazy at ODNR as they are so big they couldn't even find the lease the City had signed last year. It was not sitting in real estate land management as it was over in engineering and parks. Part of our issue was they said you guys don't have a lease. Of course we did. Here is our copy.

Part of what hurt us for a long time is we finally got Scott's computer restored and I think mine is restored. Everything was wiped out when we came into our jobs. So we are able to find some things now.

Ms. Gildow: Is it ODNR that owns the lock tenders house? A little bird said that they changed their posture on selling assets like that. An engineer was going to unofficially look to see if it was structurally sound. Is there any thought being given to at least checking into that?

Mayor Mason: So if it is not structurally sound do we want it?

Ms. Gildow: I wouldn't think so.

Mayor Mason: I wouldn't think so either. Let me find out. I heard that and I thought that was odd because I used to be over state parks and that is the Muskingum River Parkway District and I have never heard of ODNR selling anything, but I would be curious to see.

Ms. Gildow: They certainly are not doing anything with it.

Mayor Mason: No, they haven't for years. I am curious to find out what could be done to restore it or save it.

Ms. Gildow: It's got some issues, but it is a beautiful building and a beautiful location.

Mayor Mason: That is where the lock tender used to live. That is sort of cool.

Ms. Heskett asked if Mr. Brown would like to explain the sanitation department crew leader and vehicle operation needs.

Scott Brown: Yes, thank you. Right now in sanitation they have four people and they call them Crew Leaders, but they are Vehicle Operators-Two which is a pay grade 150. The plan is that

with last year's replacement of the trash compactor with the containers. We have a truck that will now be able to pick those boxes up and take them to the land fill. Current practice had been to take each truck to the land fill. So, we need to add another 150 level driver to drive that truck with the containers to the land fill. The reason is we still want our trash trucks out doing their routes so if they are coming in and dumping here we don't have anybody to take it to the landfill. We need to create a 5th person in that maximum strength ordinance so we can do that. The container usually holds two trash truck loads once compacted. What happens is when I spoke with Jeff Shook in a day's time if we had a dedicated driver we would be able to take three of those loads to the land fill in a day which would essentially take loads from six trash trucks going to the land fill each day.

Mr. Vincent: If a trash truck is going to the land fill it also includes time of the crew riding along. If this is going to save time, will we eventually be able to cut down on time and crew?

Scott Brown: It is very possible. They are kind of different. You have the guys that kind of hang on the trucks for lack of a better term and they are at a pay grade 120. There are usually two of those and only one driver so it is a three person crew. So, to your point, yes. They have a lot of windshield time or sitting in the break room while the guy is driving it to the landfill and back. It is very conceivable that they will be able to pick up more trash in a day's time by not having to make those extra trips to the landfill. It is a fair point and not one I have a solid answer for you.

Mr. Vincent: There is potential. We are adding a position here, but we may be able to reduce later on. Does anybody have anything else? I do greatly appreciate everyone's time this evening. We started late and went way over, but I think it was all very valuable information. We got a lot of questions answered. We learned a lot and it is always helpful.

Ms. Gildow: This is what puts the story behind the numbers and I love that.

Mr. Vincent: Thanks everyone and have a good evening.

The meeting adjourned about 7:00 p.m.

Susan Culbertson, Clerk	Daniel Vincent, President of Council

ORDINANCE NO. 2020-70
INTRODUCED BY COUNCIL

AN ORDINANCE APPROVING THE AGREEMENT TO CREATE THE CITY OF ZANESVILLE - PERRY TOWNSHIP JOINT ECONOMIC DEVELOPMENT DISTRICT; AND APPROVING A COOPERATIVE DEVELOPMENT AGREEMENT

WHEREAS, Ohio Revised Code Chapter 715 empowers certain political subdivisions to form joint economic development districts to share in the costs of improvements for economic development purposes; and

WHEREAS, in accordance with Ohio Revised Code Section 715.72, the City of Zanesville, Muskingum County, Ohio (the "City") and Perry Township, Muskingum County, Ohio (the "Township") have negotiated and intend to enter into the City of Zanesville - Perry Township Joint Economic Development District Agreement (the "JEDD Agreement") to create and provide for the operation of a joint economic development district known as the City of Zanesville - Perry Township Joint Economic Development District (the "JEDD"); and

WHEREAS, the stated purpose of the JEDD Agreement is to facilitate economic development to create or preserve jobs and employment opportunities and to improve the economic welfare of the people in the State of Ohio, Muskingum County, the Township, and the City; and

WHEREAS, the Zanesville-Muskingum County Port Authority (the "Port Authority"), as the only property owner in the territory proposed for inclusion in the JEDD (the "District") and there being no businesses yet in the District, has petitioned for the formation of the JEDD, the territory to be included is not subject to any zoning regulations that would be adverse to the purposes of the JEDD, and no electors reside within the District; and

WHEREAS, pursuant to Ohio Revised Code Section 715.72, the City conducted a public hearing regarding the JEDD Agreement and the JEDD, with appropriate public notice, and made available for public examination all documents required by law for review; and

WHEREAS, the City, the Township, the Port Authority, and Muskingum County, Ohio (the "County") desire to collaborate on the acquisition, construction, improvement, and equipment of public infrastructure improvements and private commercial improvements within the District by entering into a Cooperative Development Agreement (the "Cooperative Development Agreement") setting forth certain obligations of the City, the Township, the Port Authority, and the County with respect to the District.

NOW, THEREFORE, BE IT ORDAINED, by the Council of the City of Zanesville, State of Ohio:

SECTION 1. The Council approves the JEDD Agreement, in substantially the form attached to this Ordinance as Exhibit A, and authorizes the Mayor to sign the JEDD Agreement. The Mayor and the Clerk of Council are jointly authorized and directed to execute and deliver any other agreements, documents or certificates, and take all other actions, necessary to accomplish the purposes of this Ordinance.

SECTION 2. The Council adopts the Economic Development Plan for the District as provided in Exhibit A of the JEDD Agreement.

SECTION 3. The Clerk of Council shall retain on file a copy of the JEDD Agreement and its exhibits, including (i) the Economic Development Plan; (ii) the JEDD map and list of included parcels; and (iii) Ohio Revised Code Section 715.72 as effective on the date of the executed Agreement. Upon the creation of the JEDD, the Clerk of Council is authorized to file a copy or provide for the filing of all documents required by Ohio Revised Code Section 715.72(O) with the Ohio Development Services Agency in accordance with Ohio Revised Code Section 715.72(O).

SECTION 4. The Council approves the Cooperative Development Agreement, in substantially the form attached to this Ordinance as Exhibit B, and authorizes the Mayor to sign the Cooperative Development Agreement. The Mayor and the Clerk of Council are jointly authorized and directed to execute and deliver any other agreements, documents or certificates, and take all other actions, necessary to accomplish the purposes of this Ordinance.

SECTION 5. This Council hereby finds and determines that all formal actions of this Council concerning and relating to the adoption of this Ordinance were taken in an open meeting of this Council and that all deliberations of this Council and of any of its committees that resulted in those formal actions occurred in meetings open to the public, in compliance with law, including Ohio Revised Code Section 121.22.

SECTION 6. This Ordinance shall be effective at the earliest date allowed by law.

Signed:

1st Reading: _____, 2020
2nd Reading: _____, 2020
3rd Reading: _____, 2020

_____
Donald Mason
Mayor of City of Zanesville

Adopted _____, 2020

_____
Daniel M. Vincent
President of Council

Attest:

_____
Susan Culbertson, Clerk of Council

Effective _____, 2020

Approved as to form:

_____
Law Director

AUTHENTICATION

This is to certify that this Ordinance was duly adopted and filed with the Clerk of Council of the City of Zanesville, this _____ day of _____, 2020.

_____
Clerk of Council

CERTIFICATE

I hereby certify that the foregoing is a true and correct copy of an Ordinance duly adopted by the City Council of the City of Zanesville, Muskingum County, Ohio.

_____
Clerk of Council

Dated:_____

EXHIBIT A

JEDD AGREEMENT

CITY OF ZANESVILLE-PERRY TOWNSHIP JOINT ECONOMIC DEVELOPMENT DISTRICT AGREEMENT

This City of Zanesville-Perry Township Joint Economic Development District Agreement (the **Agreement**) is made and entered into this ___ day of _____, 2020 (the **Effective Date**), by and between the CITY OF ZANESVILLE, OHIO (the **City**), a municipal corporation duly organized and validly existing under the laws of, and a political subdivision of, the State of Ohio (the **State**) and having an address for purposes hereof at 401 Market Street, Zanesville, Ohio 43701 and PERRY TOWNSHIP, MUSKINGUM COUNTY, OHIO (the **Township** and, together with the City, the **Contracting Parties** and each a **Contracting Party**), a political subdivision of the State and having an address for the purposes hereof at 4625 Boggs Road, Zanesville, Ohio 43701, in accordance with the terms and provisions set forth herein.

WHEREAS, the City and the Township are located entirely within Muskingum County, Ohio (**Muskingum County**) and share contiguous territorial boundaries;

WHEREAS, the Zanesville-Muskingum County Port Authority (the **Port Authority**) has purchased or has the option to purchase approximately 203.41 acres located in the Township as more fully described in Exhibit A (the **Site**), to develop into port authority facilities as defined in Ohio Revised Code (**ORC**) Section 4582.21, including office and commercial space on the Site (the **Project**);

WHEREAS, in order to support the Project as well as additional economic development in neighboring areas of Muskingum County, the Site requires certain necessary infrastructure improvements, including but not limited to the road maintenance and improvements, snow removal, and emergency, police, and fire services;

WHEREAS, pursuant to the terms of a Cooperative Agreement of even date herewith (the **Cooperative Agreement**), the City, the County of Muskingum, Ohio (the **County**), the Port Authority, and the Township will provide services to the Site as provided therein and the Port Authority will provide for the construction of the Project;

WHEREAS, the City and the Township desire to promote cooperative economic development efforts in the area of the Township generally located along State Route 40 east of the territorial boundaries of the City, including through efforts to promote the economic development of the City, the Township, and the County, by means of creating a joint economic development district (the **District** or the **JEDD**) pursuant to ORC Section 715.72 (the **Act**), which District shall facilitate economic development to create or preserve jobs and employment opportunities within the meaning of ORC Section 715.72(C), thereby improving the economic welfare of residents of the City, the Township, and the State generally; and

WHEREAS, the legislative authorities of the City and the Township each have approved, authorized, and directed the City and the Township, respectively, to make and enter into this Agreement, by and through their respective officers in accordance with Ordinance No. _____, enacted by the City on _____, 2020, and Resolution No. _____, adopted by the Township on _____, 2020.

NOW, THEREFORE, in consideration of the mutual promises and covenants set forth in this Agreement, the Contracting Parties agree and bind themselves, their agents, employees and successors as follows:

Section 1. Creation of District and Purpose.

The City and the Township, as contracting parties within the meaning of ORC Section 715.72(A)(1), by their combined action evidenced by the approval of legislation identified above and by the duly authorized execution of this Agreement, hereby create the District, which shall be known as the "City of Zanesville-Perry Township Joint Economic Development District." The District shall be a joint economic development district under, and operating pursuant to, the Act.

Each Contracting Party hereby acknowledges and agrees as follows with respect to this Agreement and the District:

A. that it is entering into this Agreement freely and without duress or coercion;
B. that the creation of the District and the levy of an income tax within the District as provided herein will enable the City, the Township, and the District to more efficiently provide governmental services to the area within the District and to more effectively promote economic development within the District, the City, and the Township;
C. that the District shall, and it is the purpose of the District to, facilitate economic development to create or preserve jobs and employment opportunities and to improve the economic welfare of the people in the State, Muskingum County, the City, and the Township; and
D. that consideration exists to support this Agreement.

Section 2. Territory of the District.

The territorial boundaries of the District are described in Exhibit A attached hereto and incorporated by reference into this Agreement. The territory of the District is located entirely within the territorial boundaries of the Township. The territory to be included in the District is not zoned, which lack of zoning designation is appropriate to the function of the District.

Section 3. Formation of the District.

It is the intent of the Contracting Parties that this Agreement be approved without an election by complying with the requirements of ORC Section 715.72(M)(1). The Contracting Parties represent and warrant as follows:

A. The resolution approving this Agreement has been approved by a unanimous vote of the Township Trustees;
B. Owners of a majority of the properties and businesses located within the proposed District have petitioned for the District to be formed, as contemplated under the Act; and
C. The territory to be included in the District is zoned in a manner appropriate to the proposed function of the District.

The City shall be responsible for filing with the Director of Development Services of the State the documents required to be filed by ORC Section 715.72(O). Each Contracting Party shall separately bear its own costs related to the establishment of the District, including any professional engineering, legal counsel, or other services that may be necessary.

Section 4. Term.

The initial term of this Agreement shall commence on the Effective Date (which Effective Date is more than thirty-one (31) days after the Agreement was approved in accordance with ORC Section 715.72(M)(3)) and shall continue for a period of thirty (30) years (the **Initial Term**). The Agreement shall automatically extend for one renewal term of thirty (30) years (the **Renewal Term**) unless (i) either the City or the Township notifies the other Contracting Party in writing at least one year prior to the expiration of the Initial Term that it does not intend to renew this Agreement, or (ii) either the City or the Township notifies the other Contracting Party in writing at least one year prior to the expiration of the Initial Term or any Renewal Term that it is requesting to extend this Agreement beyond the originally contemplated Initial Term of thirty (30) years or the originally contemplated Renewal Term of thirty (30) years, as applicable, in which case this Agreement shall extend in accordance with such written request if such written request is accepted by the other Contracting Party. In the event of any expansion of the District pursuant to Section 6 herein, the Agreement shall begin a new Initial Term, followed by a Renewal Term upon the terms and conditions described herein.

This Agreement may only be terminated in compliance with applicable statutory provisions and in accordance with Section 5 of this Agreement. The Agreement shall continue in existence throughout its term and shall be binding on the Contracting Parties and on either Contracting Party's succeeding entities, whether such entities succeed by annexation, merger, or otherwise.

The provision herein for the Initial Term and any Renewal Term or other extension of this Agreement recognizes that the accrual of benefits to the Contracting Parties resulting from this Agreement may take decades.

Section 5. Amendments to the Agreement Other than to Amend to Add Property.

The Contracting Parties may amend or modify the terms of this Agreement or terminate this Agreement at any time by mutual agreement. An amendment or modification to this Agreement shall not be effective or binding on the Contracting Parties unless the legislative authorities of both Contracting Parties pass the appropriate legislation agreeing to and authorizing the amendment to this Agreement within ninety (90) days of each other.

This Agreement may only be terminated pursuant to its terms as set forth in Section 4 or in accordance with this Section. If the Contracting Parties mutually agree to terminate this Agreement, such agreement to terminate must provide for the unwinding of this Agreement and must be approved by the legislative authorities of both Contracting Parties within ninety (90) days of each other. Upon termination of this Agreement, the City shall keep and maintain the records of the District in accordance with the City's records retention policy.

If any portion of this Agreement becomes null and void or illegal, or the performance of any provision of this Agreement becomes impossible, through any subsequent change, amendment or enactment of state law or through a ruling of any court that has jurisdiction over the Contracting Parties, the Contracting Parties agree to negotiate in good faith to reach mutual agreement regarding the manner and method of amending this Agreement to bring the Agreement into compliance with then-applicable statutory provisions or case law and to maintain the intent of the Contracting Parties under this Agreement and/or to rebalance the equities between the Contracting Parties consistent with the intent of this Agreement. In the event that the Contracting Parties are unable to reach a new agreement that is authorized and approved by the legislative authorities of both Contracting Parties, then the Contracting Parties may either mutually agree to terminate this Agreement in accordance with the provisions of the preceding paragraph, or either Contracting Party may apply to a court of competent jurisdiction to interpret the contract consistent with then-applicable statutes or case law and, if necessary, modify or terminate this Agreement in order to comply with then-applicable statutes or case law and to preserve the equities of the Contracting Parties as set forth in this Agreement.

Section 6. Addition of Property to the District.

Subject to any applicable provisions of the ORC now existing or hereafter adopted, including but not limited to ORC Section 715.72(L), this Agreement, including the exhibits hereto, may be amended from time to time to add property to the District. Property may be added to the District upon the filing with either Contracting Party of a request by the majority of the owners of the property to be added to the District and a majority of the owners of the businesses to be added to the District. Upon agreement of both Contracting Parties, the Agreement, including Exhibits A, B, and C hereto, shall be amended to add such property to the territory of the District pursuant to the request of the majority of the owners of that property and a majority of the owners of those businesses. Property added to the District shall meet all of the requirements of Section 3 herein and ORC Section 715.72(E)(1), and all procedures of ORC Section 715.72(L) shall be followed in connection with any such addition of property to the District. Property shall not be removed from the District without the agreement of both Contracting Parties.

Section 7. Contributions and Covenants of the Contracting Parties.

A. The City shall:

i. Collect, administer, enforce, and audit the JEDD income tax applicable in the District in accordance with this Agreement.

ii. Provide municipal water and sewer service to the District in accordance with all City policies, rules, and regulations until the completion of all utility upgrades, at which time the County will provide water and sewer service to the District.

iii. Through its City Auditor or his or her designee, provide service as fiscal officer to the District, including administration and management of JEDD Board accounts.

iv. The City shall work in good faith with the Township regarding any proposed incentives for locating new businesses or expanding existing businesses within the District and, further the City agrees and affirms that it will not unreasonably withhold written approval of the exemptions set forth in ORC Section 715.72(U).

v. As provided in ORC Section 715.72(R), the City hereby agrees that, for so long as this Agreement is in effect, it shall not annex any real property within the District. To the extent not prohibited by law, the City shall not accept any such annexation within the District

B. The Township shall:

i. Provide all usual and customary governmental services to the District that are furnished by the Township to other unincorporated portions of the Township.

ii. Be responsible for the acceptance, dedication, and maintenance of all existing or future Township roads located within the District.

iii. Have the right to issue and reissue levies in all areas of the Township, including within the District, for the provision of such services.

iv. Pursuant to ORC Section 715.72(U), throughout the term of the JEDD, obtain the express written consent of the City prior to granting any tax exemption for any property in the JEDD District. The foregoing limitation shall apply solely to tax exemptions set forth in ORS Section 715.72(U), which include exemptions established pursuant to ORC Chapter 1728 and ORC Section 3735.67, 5709.62, 5709.63, and 5709.632, as applicable.

v. Maintain and enforce zoning regulations within the District, if, as to the Site, such property is subject to zoning laws or regulations when the District was formed, otherwise if such property is subject to zoning laws or regulations when the property is added to the District.

C. The Contracting Parties shall:

i. jointly cooperate in carrying out the economic development plan for the District attached hereto as Exhibit B.

ii. collaborate through the District with respect to capital improvements in the event that the Contracting Parties jointly determine that economic development in the District creates a demand for public infrastructure

improvements serving the District or the area surrounding the District including, but not limited to, and solely upon joint agreement of the Contracting Parties, paying costs of infrastructure improvements within or otherwise benefitting the District; which infrastructure improvements may include improvements relating to roads, water and sewer, electric, natural gas, fiber, cable, or any other capital improvements directly supporting non-residential development within the District, or, upon the joint agreement of the Contracting Parties, otherwise benefitting the District, but which infrastructure improvements shall not include ordinary maintenance or repairs.

iii. pay equal shares of any District administrative costs in excess of income tax revenue received by the JEDD Board each year or otherwise available to the JEDD Board for the purposes of paying administrative costs.

Section 8. Board of Directors of the District.

The Board is hereby established to govern the District. The Board shall consist of three members appointed as set forth in ORC Section 715.72(P)(2).

A. The initial City member of the Board shall be _____. Subject to any applicable restrictions in ORC Section 715.72, all future City members of the Board shall be appointed by City Council and shall serve at the pleasure of City Council.

B. The initial Township member of the Board shall be _____. Subject to any applicable restrictions in ORC Section 715.72, all future Township members of the Board shall be appointed by a majority vote of the Board of Township Trustees and shall serve at the pleasure of the Board of Township Trustees.

C. The third member of the Board shall be nominated by the Port Authority and appointed by the unanimous vote of the initial City member and the initial Township member. Subject to any applicable restrictions in ORC Section 715.72, all future members of the Board selected pursuant to this Section 8(C) shall be nominated to the Board by the Port Authority and appointed by the unanimous vote of the City member and the Township member.

D. When applicable, the representative of the business owner or owners located in the JEDD District shall be appointed by mutual agreement of the City member and the Township member, provided that if the City member and the Township member do not so appoint a representative under this Section 3(b)(iv) within thirty (30) days after (A) the date that the first business becomes operational in the JEDD District, (B) the end of a term of office for a business owner representative, or (C) the occurrence of any other vacancy in the office of business owner representative, the chairperson of the Board shall notify the business with the greatest number of employees working in the JEDD District that said business is entitled to appoint the

business owner representative, provided that any such appointment shall be made in writing by a duly authorized officer of the appointing business and delivered to the chairperson of the Board.

E. When applicable, the representative of the employees working in the JEDD District shall be appointed by mutual agreement of the City member and the Township member, provided that if the City member and the Township member do not so appoint a representative under this Section 3(b)(iv) within thirty (30) days after (A) the date that the first business becomes operational in the JEDD District, (B) the end of a term of office for a business owner representative, or (C) the occurrence of any other vacancy in the office of business owner representative, the chairperson of the Board shall notify the business with the greatest number of employees working in the JEDD District that said business is entitled to appoint the employee representative, provided that any such appointment shall be made in writing by a duly authorized officer of the appointing business and delivered to the chairperson of the Board.

The members of the Board shall serve without compensation. Necessary and authorized expenses incurred by members on behalf of the District shall be reimbursed from District funds in accordance with procedures established by the Board.

The Board shall have the following officers (hereinafter, the **Officers**): a Chairperson, a Vice-Chairperson, a Secretary, and a Treasurer. The Chairperson shall be the Board Member specified in ORC Section 715.72. The Board shall elect the Vice-Chairperson, who shall be a Board Member. The Treasurer of the Board shall be the City Auditor or his or her designee of the City, provided that the Treasurer is not required to be a Board Member. The Board shall elect the Secretary, provided that the Secretary is not required to be a Board Member. The Officers shall be elected at the first meeting of the Board and thereafter every other year for two-year terms and shall serve until their respective successors take office. The Board shall establish a procedure for conducting those elections. The Officers shall perform such duties as provided herein and such additional duties as may be required from time to time by the Board. The Board may employ such additional personnel or professional services as may be necessary to assist the Board or the Officers in the performance of their duties.

Section 9. <u>Power, Duties, and Functions of Board.</u>

The Board shall meet at least once each calendar year on a date determined by the Board. The Board shall adopt procedures for holding and conducting regular and special meetings. The Contracting Parties shall provide the Board with necessary meeting space. The City shall also provide any necessary clerical and administrative assistance that the Board may need from time to time, including telephone services and a mailing address.

A minimum of two members shall constitute a quorum for Board meeting purposes. The Board shall act through resolutions adopted by the Board. A resolution must receive the affirmative vote of at least a majority of members present and constituting a quorum to be adopted. A resolution adopted by the Board shall be immediately effective unless otherwise provided in that resolution.

The Board may adopt by-laws for the regulation of its affairs and the conduct of its business consistent with this Agreement. The Chairperson shall preside over and conduct the meetings of the Board in accordance with its by-laws or other procedures adopted by the Board. Pursuant to ORC Section 715.72(P)(5), the Board is a public body for the purposes of ORC Section 121.22, the Ohio Public Meetings Act. All meetings of the Board, whether regularly scheduled or special meetings, must comply with the provisions of ORC Section 121.22 as amended from time to time.

The Vice-Chairperson shall act as Chairperson in the temporary absence of the Chairperson. The Secretary shall be responsible for the records of the Board including, but not limited to, correspondence and minutes of the meetings of the Board. The City Auditor or his or her designee of the City, as Treasurer of the Board, shall be the fiscal officer of the Board and shall be responsible for all fiscal matters of the Board including, but not limited to, the preparation of the budget and the appropriations resolution, paying or providing for the payment of expenses of operation of the Board, receiving, safekeeping, and investing, or providing for the receipt, safekeeping, and investment of, funds of the Board and maintaining, and providing for the maintenance of, accurate accounts of all receipts and expenditures. The Board shall designate by resolution, or in its by-laws, those Officers who may sign documents on behalf of the Board.

The Board, upon the recommendation of the City Auditor or his or her designee of the City, shall adopt an annual budget for the District. The fiscal year of the District shall be the same as the fiscal year of the City, unless otherwise determined by the Board with the consent of the City Auditor or his or her designee of the City. The budget shall estimate the revenues of the District and the expenses of the operation of the District. The Board shall establish an appropriations procedure to provide for payment of the long-term maintenance of the District and the distribution of income tax revenues in accordance with Section 10 herein.

The Board, on behalf of the District, shall:

A. establish and maintain such funds or accounts as it deems necessary, either of its own, or in conjunction with or through the Contracting Parties to this Agreement, which accounts shall be managed by the City Auditor or his or her designee of the City;

B. authorize one or more Officers to sign all instruments necessary or incidental to the performance of its duties and the execution of its powers under this Agreement;

C. adopt a resolution to levy an income tax within the District in accordance with ORC Section 715.72(F)(5) and Section 10 herein;

D. apply JEDD Board Revenue, as defined in Section 10(D) herein, for Board administrative expenses, for infrastructure improvements and for any other lawful purpose;

E. use any other revenues of the District available to the Board to carry out the economic development plan for the District and, from time to time, modify the economic development plan to better accomplish the public purposes of the District;

F. apply for, receive and accept from any federal agency, state agency or other person or entity grants for or in aid of the construction or operation of any District facility, or for programs or other projects of the District, and receive and accept aid or contributions from any source of money, property, labor or other things of value, to be held, used and applied only for the benefit of the District and the purposes for which such grants, aid or contributions are made;

G. purchase liability insurance protecting the District, its Board or Officers or such other insurance as the Board may determine to be necessary and appropriate;

H. be authorized to execute any agreement, cooperative agreement, financing agreement, or other arrangement with any private entity and with any other political subdivision or governmental entity as may be permitted by law, including but not limited to the Port Authority, Muskingum County, the City, and the Township, to provide or facilitate the provision of public infrastructure improvements that benefit of the District or whenever otherwise necessary or convenient to carry out the powers granted in this Agreement, including, without limitation, any agreement related to any economic development program, tax increment financing program, special assessment program, or bond financing undertaking by any Contracting Party or political subdivision in cooperation with any Contracting Party;

I. be authorized to do all acts and things necessary or convenient to carry out the powers granted in ORC Section 715.72 or any successor provisions thereto; and

J. be authorized to do all acts and things necessary or convenient to carry out the powers granted in this Agreement.

The City and the Township agree that the JEDD Board may use any available revenues of the District to carry out the economic development plan for the District and may, from time to time, modify the economic development plan to better accomplish the public purposes of the District. The City and the Township agree that the Board or either Contracting Party may execute any agreement, cooperative agreement, financing agreement, or other arrangement with any private entity and with any other political subdivision, including but not limited to Muskingum County, the Township, and the City, to provide or facilitate the provision of public infrastructure improvements or services to benefit the District or whenever otherwise necessary or convenient to carry out the powers granted in this Agreement, including, without limitation, any agreement related to any tax increment financing program, special assessment program, or bond financing undertaking by any Contracting Party or political subdivision in cooperation with any Contracting Party.

Section 10. Income Tax to be Levied in the District.

A. The Board at its initial meeting shall adopt a resolution to levy a tax on income earned by persons working within the District and based on net profits of businesses located in the District in accordance with ORC Section 715.72(F)(5) (the **Income Tax Resolution**). The Income Tax Resolution shall be effective until it is replaced by a subsequent Income Tax Resolution. Pursuant to ORC Section 715.72(F)(5),

all income tax collected from any business or entity within the District or any person working within the District shall be subject to this Agreement and included in the total income tax revenue collected within the District (collectively, the **Total Revenues**). The income tax shall go into effect as soon as legally permissible.

B. The Income Tax Resolution shall establish the income tax rate for employees working in the District (the **Employee Rate**), which Employee Rate shall at all times during the term of this Agreement equal the rate levied in the City. As of the date of execution of this Agreement by the Contracting Parties, the City income tax rate is 1.9%. In each annual Income Tax Resolution, the Board shall adjust the Employee Rate as necessary so that it matches the rate of income taxation in the City.

C. The Income Tax Resolution also shall establish the income tax rate applicable to net profits of businesses located in the District (the **Business Rate**), which Business Rate shall at all times during the term of this Agreement equal the rate levied in the City. In each annual Income Tax Resolution, the Board shall adjust the Business Rate as necessary so that it matches the rate of income taxation in the City.

D. The Income Tax Resolution shall designate that (a) a reasonable amount of the Total Revenues collected each year, as determined by the Board, shall be paid to the Board for the administrative expenses of the Board, which administrative expenses may include reimbursement to the City for the time of employees of the City in carrying out Section 7(a)(i) of this Agreement, outside legal or accounting fees, the cost of public notice and the like, and (b) the remaining amount of the Total Revenues collected each year after the application of Section 10(D)(a) shall be divided as follows: (i) 30% shall be paid to the City; (ii) 30% shall be paid to Muskingum County; (iii) 30% shall be paid to the Port Authority; and (iv) 10% shall be paid to the Township.

Notwithstanding the foregoing, before the Board may adopt an Income Tax Resolution, the Board shall (i) confirm that the City, the Port Authority, Muskingum County, and the Township have met to consider whether any modifications to the allocation of Total Revenues may be appropriate for that year; and (ii) upon a request approved in writing by the applicable officials of each of the City and the Township, modify the allocation of Total Revenues according to such written request.

At such time as the Board adopts the second Income Tax Resolution following the first Income Tax Resolution and every other year thereafter, the Board shall review the amount of its administrative expenses from the preceding two year period and include such findings in its determination of its reasonable administrative expenses for the succeeding Income Tax Resolutions until such time as the Board makes a new finding under this Section.

E. The Board shall resolve that, pursuant to this Agreement, the City will collect, administer, and enforce the income tax within the District in accordance with this Agreement and the City's rules and regulations currently in effect and as may be amended from time to time regarding the collection, administration, and enforcement of the municipal income tax in effect within the City.

F. Pursuant to ORC Section 715.72(F)(5)(c), the Board shall enter into an agreement with the City (the **District Income Tax Collection and Distribution Agreement**) as expeditiously as possible upon the District's creation to administer, collect and enforce the income tax on behalf of the District in accordance with this Agreement. The District Income Tax Collection and Distribution Agreement shall provide that the City is responsible for the receipt, safeguarding, and investment of the income tax revenues collected within the District and that the City shall make an annual written report to be mailed to the Board and the Township within sixty (60) days of the end of the fiscal year regarding the receipt and distribution of the income tax of the District during the previous fiscal year. In addition, the Board may enter into such additional agreements as it determines may be necessary to effectuate the collection of income tax by the City within the District, including with respect to the apportionment of income tax liability under ORC Section 718.02(B).

G. The Board may establish procedures by which the income tax levied on employee wages earned within the District is to be collected from employees employed within the District or withheld by businesses located in the District, and the Board shall establish procedures by which the income tax on net profits of businesses located in the District is to be collected from one or more businesses located in the District. Such procedures may provide for the payment of withholding or estimated taxes by those employees or businesses and the reconciliation of income taxes paid on net profits of businesses between fiscal years.

Section 11. Defaults and Remedies.

A failure to comply with the terms of this Agreement shall constitute a default hereunder. The Contracting Party in default shall have sixty (60) days after receiving written notice from the other Contracting Party of the event of default and demand to cure the default. If the default is not cured within that time period, the non-defaulting Contracting Party may sue the defaulting Contracting Party for specific performance under this Agreement or for damages or both. This Agreement may not be terminated because of default under the Agreement by either Contracting Party unless termination occurs as provided for in Section 5 of this Agreement.

The Contracting Parties agree that the nature of the Agreement is unique and monetary damages are inadequate to fully compensate a non-defaulting Contracting Party. Accordingly, the Contracting Parties agree that specific performance is an appropriate and available remedy for a breach of contract action brought pursuant to this Agreement in addition to any other remedy available at law and equity. Both Contracting Parties also agree that because monetary damages are inadequate to fully compensate a non-defaulting Contracting Party, a non-defaulting

Contracting Party has the right to seek an injunction or other equitable relief to prevent the continued breach of this Agreement by a defaulting Contracting Party.

Section 12. Support of Contract.

This Agreement shall be binding upon the Contracting Parties and their lawful successors and assigns. The Contracting Parties agree to cooperate with each other and to use their best efforts to do all things necessary for the creation and continued operation of the District. In the event that this Agreement, or any of its terms, conditions, or provisions is challenged by any third party or parties in a court of law, the Contracting Parties agree to cooperate with one another and to use their best efforts in defending this Agreement with the object of upholding this Agreement. Each Contracting Party shall bear its own costs in any such proceeding challenging this Agreement or any term or provision herein.

Section 13. Severability.

With the exception of Section 7 or Section 10 of this Agreement, if any other paragraph, provision or section of this Agreement is held to be illegal or invalid for any reason, then:

(i) that illegality or invalidity shall not affect the remainder of any other paragraph, provision or section, all of which shall be construed and enforced as if the illegal or invalid portion were not contained herein;

(ii) the illegality or invalidity of any paragraph, provision or section shall not affect any legality or applicability of any other paragraph, provision, or section of this Agreement; and

(iii) each paragraph, provision, or section of this Agreement shall be deemed to be effective, operative, made, assumed, entered into, or taken in the manner and to the full extent permitted by law.

If any paragraph, provision, or part thereof of Section 7 or Section 10 of this Agreement is held to be illegal or invalid for any reason, the Contracting Parties may jointly determine to terminate this Agreement pursuant to Section 5 of this Agreement.

Section 14. Governing Law.

This Agreement shall be governed exclusively by and construed in accordance with the laws of the State of Ohio, and in particular, ORC Section 715.72 in effect as of the date when the owners of property in the District filed their petitions consenting to the formation of the District. A copy of ORC Section 715.72 in effect as of the date when the owners of property in the District filed their petitions consenting to the formation of the District is attached hereto as Exhibit C. In the event that ORC Section 715.72 is amended or is supplemented by the enactment of one or more new sections of the ORC relating to joint economic development districts, the Contracting Parties shall follow the provisions of ORC Section 715.72 when the owners of property in the District filed their petitions consenting to the formation of the District, unless the Contracting Parties agree to amend this Agreement in accordance with Section 5 herein. If any amendment or subsequent

enactment of one or more new sections of the ORC relating to joint economic development districts renders compliance by the Board, the Contracting Parties, or the District with Sections 7 or 10 of this Agreement illegal or impossible, the Contracting Parties may jointly determine to terminate this Agreement pursuant to Section 5 of this Agreement.

Section 15. Miscellaneous.

Any notice or consent required or permitted to be given by or on behalf of either party to the other shall be given by mailing such notice or consent by United States certified or registered mail, postage prepaid and return receipt requested, or via a reputable express overnight mail service which provides proof of delivery addressed to the parties set as set forth below or at such other address as may be specified from time to time in writing delivered to the other party. Notices shall be effective upon receipt or refusal, as the case may be:

If to the City: City of Zanesville, Ohio
Attn: Mayor
401 Market Street
Zanesville, Ohio 43701
(740) 617-4908

If to the Township: Perry Township, Muskingum County, Ohio
Attn: President
4625 Boggs Road
Zanesville, Ohio 43701
(740) 819-2344

The captions and headings herein are for convenience only and in no way define, limit, or describe the scope or intent of any provisions or sections herein.

This Agreement may be executed in one or more counterparts, each of which shall be regarded as an original and all of which together shall constitute but one and the same instrument.

[Signature Page Follows]

IN WITNESS WHEREOF, the Contracting Parties have caused this Agreement to be duly signed in their respective names by their duly authorized officers, all as of the date first hereinbefore written.

TOWNSHIP OF PERRY,
MUSKINGUM COUNTY, OHIO

By: _____
Trustee

By: _____
Trustee

By: _____
Trustee

CITY OF ZANESVILLE, OHIO

By: _____
Mayor

Approved as to form and correctness:

_____
Director of Law

[Signature Page to City of Zanesville - Perry Township JEDD Agreement]

CITY'S FISCAL OFFICER'S CERTIFICATE

The undersigned, Fiscal Officer of the City of Zanesville, Ohio, hereby certifies that the moneys required to meet the obligations of the City during the year 2020 under the foregoing Agreement have been lawfully appropriated by the City Council of the City of Zanesville, Ohio for such purpose and are in the treasury of the City or in the process of collection to the credit of an appropriate fund, free from any previous encumbrances. This Certificate is given in compliance with Ohio Revised Code Sections 5705.41 and 5705.44.

_____
Fiscal Officer
City of Zanesville, Ohio

Dated: _____, 2020

TOWNSHIP'S FISCAL OFFICER'S CERTIFICATE

The undersigned, Fiscal Officer of Perry Township, Muskingum County Ohio, hereby certifies that the moneys required to meet the obligations of the Township during the year 2020 under the foregoing Agreement have been lawfully appropriated by the Board of Trustees of Perry Township, Muskingum County, Ohio for such purpose and are in the treasury of the Township or in the process of collection to the credit of an appropriate fund, free from any previous encumbrances. This Certificate is given in compliance with Ohio Revised Code Sections 5705.41 and 5705.44.

_____
Fiscal Officer
Perry Township, Muskingum County, Ohio

Dated: _____, 2020

LEGAL DESCRIPTION AND MAP OF TERRITORY TO BE INCLUDED IN CITY OF ZANESVILLE-PERRY TOWNSHIP JOINT ECONOMIC DEVELOPMENT DISTRICT

The City of Zanesville-Perry Township Joint Economic Development District (the **District**) shall include a portion of the following parcels, as identified in the records of the County Auditor of Muskingum County, Ohio as of October 30, 2019:

Muskingum County Auditor Parcel Number	Approx. Acreage
51-70-03-13-000	203.41

Notwithstanding the foregoing, the property identified above and thereby included in the District shall be consistent with the property identified in that certain Option to Purchase Real Estate dated April 20, 2017 by and between the Zanesville-Muskingum County Port Authority and Jeff Robert Beam and Jack W. McClelland, Co-Trustees of Ross L. Johnston Trust.

Attachment to Ordinance No. 2020-70
EXHIBIT A

The real property included in the City of Zanesville - Perry Township Joint Economic Development District is outlined in red on the following map:

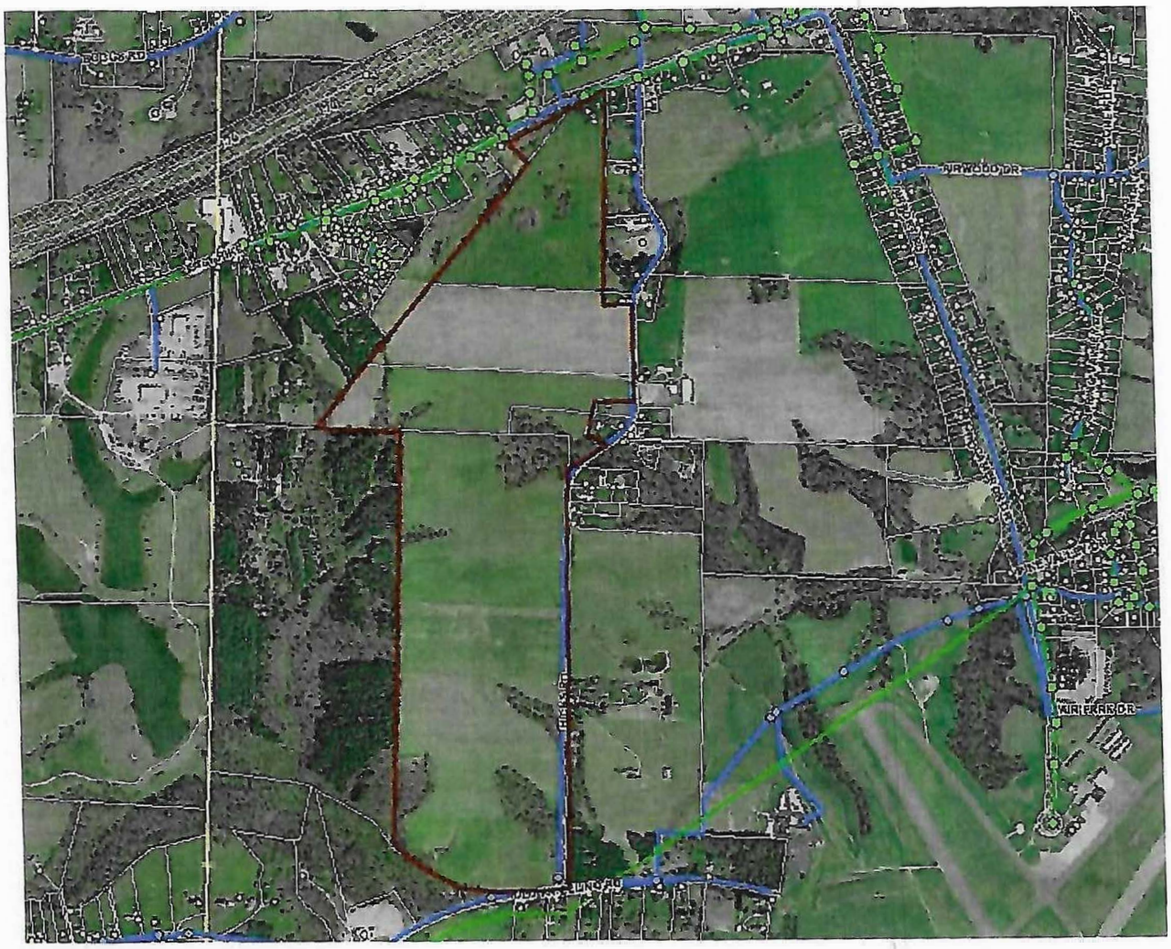

12529900v4

ECONOMIC DEVELOPMENT PLAN

Introduction

The purpose of this plan, established pursuant to Ohio Revised Code Section 715.72(F)(3), is to set forth the economic development objectives of the City of Zanesville-Perry Township Joint Economic Development District (the **District**). This plan shall serve as a framework for District efforts to engineer economic growth in Perry Township (the **Township**) and the City of Zanesville (the **City**) as well as throughout the region as a whole.

Background and Goals

The District is located on approximately 203.41 acres near intersection of Hicks Road and State Route 40 in Perry Township in Muskingum County, Ohio (the **Site**). Other industry is located near the District, and the District is a prime location for industry if supported by infrastructure and services. The Zanesville-Muskingum County Port Authority (the **Port Authority**), has expressed interest in undertaking the acquisition, construction, equipping and improvement of port authority facilities as defined in Ohio Revised Code Section 4582.21, including office and commercial space (the **Project**) on the Site if necessary infrastructure improvements can be provided.

The District, together with its partners the Township and the City and with the assistance of the Port Authority, has agreed to cooperate to attract and retain quality employers and to fuel continued industrial growth in the region.

Specifically, the District will pursue the following objectives:

- To support the Project and additional economic development in the vicinity of the Project;
- To stabilize the local tax base through the encouragement of commercial investment;
- To ensure that the District's growth is supported by adequate governmental services, including police and fire protection;
- To ensure that the District's growth is supported by adequate roads in the District, including the maintenance of existing roads and the construction and maintenance of necessary future roads;
- To promote development opportunities; and
- To encourage development that will retain and create quality jobs in the Township and the City.

Attachment to Ordinance No. 2020-70

EXHIBIT B

Cooperative Development Agreement

COOPERATIVE DEVELOPMENT AGREEMENT

This COOPERATIVE DEVELOPMENT AGREEMENT (the **Agreement**) is entered into as of this [___] day of [___], 2020 (the **Execution Date**) by and among the CITY OF ZANESVILLE, OHIO, a municipal corporation duly organized and validly existing under the laws the State of Ohio (the **State**) (the **City**), the COUNTY OF MUSKINGUM, OHIO, a county duly organized and validly existing under the constitution and laws of the State (the **County**), the ZANESVILLE-MUSKINGUM COUNTY PORT AUTHORITY, an Ohio port authority duly organized and validly existing under the laws of the State (the **Port Authority**), and the TOWNSHIP OF PERRY, MUSKINGUM COUNTY, OHIO, a township duly organized and validly existing under the constitution and laws of the State (the **Township** and, together with the City, the County, and the Port Authority the **Cooperative Parties**).

RECITALS

WHEREAS, the Cooperative Parties share a mutual interest in economic development that creates and preserves jobs and employment opportunities throughout the County, thereby improving the economic welfare of the residents of the City, the Township, the County and the State as a whole; and

WHEREAS, the Cooperative Parties seek a collaborative approach to fostering and supporting business growth in their communities, including specifically growth that is anticipated to occur in certain real property located within the territorial boundaries of the Township and depicted on Exhibit A hereto (the **Cooperative District**); and

WHEREAS, Ohio Revised Code (**ORC**) Section 9.482 authorizes contracts for services between political subdivisions, and ORC Chapter 715 empowers municipal corporations and townships to establish a joint economic development district (**JEDD**) for the purposes of facilitating economic development by means of, among other things, providing for appropriate infrastructure and public services to support such growth and establishing an income tax to pay the costs thereof; and

WHEREAS, the Cooperative Parties have determined to pursue the creation of a JEDD with respect to the Cooperative District pursuant to the terms hereof and the City and the Township will, to that end, enter into an agreement creating and governing the JEDD according to the terms set forth in Exhibit B; and

WHEREAS, the Port Authority owns or soon will own all of the real property located in the Cooperative District and has presented to the parties to this Agreement its plan to develop port authority facilities as defined in Ohio Revised Code Section 4582.21, including office and commercial space in a mixed-use business and industrial park (**Project**); and

WHEREAS, the Cooperative Parties wish to cooperate in the development of certain public infrastructure improvements and roads within and supporting the Project and wish to outline the rights and responsibilities relating thereto in this Agreement; and

WHEREAS, the legislative authorities of the City, the County, the Port Authority, and the Township each have approved, authorized and directed the City, the County, the Port Authority, and the Township, respectively, to make and enter into this Agreement by and through their respective officers in accordance with Ordinance No. [___], adopted by the City on [___], 2020, Resolution No. [___], enacted by the County on [___], 2020, Resolution No. [___], enacted by the Port Authority on [___], 2020, and Resolution No. [___], enacted by the Township on [___], 2020.

NOW, THEREFORE, in consideration of the premises and the mutual covenants and promises herein contained, the sufficiency of which are acknowledged by the parties hereto, the City, the County, the Port Authority, and the Township hereby agree as follows:

Section 1. Term.

(a) This Agreement shall be and remain in full force and effect from the date hereof and until [___], 2050 (the **Initial Term**), at which time, unless otherwise terminated by any or all of the Cooperative Parties, this Agreement automatically shall renew for one successive terms of 30 years (the **Renewal Term**); provided, however, that notwithstanding anything to the contrary herein, this Agreement shall automatically renew and remain in effect for a period of one or more Renewal Terms, as applicable, for so long as the JEDD Agreement, as defined herein, shall remain in effect. During the final year of the Initial Term and the final year of each Renewal Term, any of the Cooperative Parties may, by written notification to the other parties following authorization by its legislative authority, cause this Agreement to terminate at the end of such term. The provision herein for the Initial Term of this Agreement recognizes that the accrual of benefits to the parties from this Agreement may take decades.

(b) This Agreement may be terminated at any time by mutual consent of the Cooperative Parties as authorized by their respective legislative authorities as provided herein. Unless otherwise agreed, in order for such termination to be effective, the legislative actions of the Cooperative Parties that terminate this Agreement must occur and be effective within a period of ninety (90) days of each other.

Section 2. Covenants of the City, the County, the Port Authority, and the Township.

(a) Territory. The Cooperative Parties hereby agree to the covenants of this Section 2 with respect to any parcel of real property located, either in whole or in part, within the Cooperative District. It is the intent of the Cooperative Parties that the territory of the Cooperative District, as depicted in Exhibit A, may be amended from time to time so that it conforms with the territory of the JEDD (the **JEDD District**). An amendment to the territory of the Cooperative District requires written consent of the Township Board of Trustees, the City Mayor, the County Commissioners, and the Executive Director of the Port Authority. Any other amendment to the Agreement shall be made in accordance with Section 6(h) hereof.

(b) Services.

(i) Law Enforcement. The County Sheriff's office shall provide law enforcement services to the Cooperative District.

(ii) Fire Department and Emergency Medical Services. The Township Fire Department shall provide fire and emergency medical services to the Cooperative District.

(iii) Snow Removal and Right-of-Way Mowing. The Township shall undertake or provide for the removal of snow and the mowing and care of greenspace along right-of-ways for the roads described on Exhibit C in the following approximate specifications: (i) for the Phase 1 roadway, approximately 3,300 linear feet of roadway, including one 55' diameter cul-de-sac, (ii) for the Phase 2 roadway, approximately 850 linear feet of roadway, including one 55' diameter cul-de-sac, and (iii) an approximately 640 linear foot future right-of-way between Hicks Road and the cul-de-sac at the end of Phase 1.

(iv) Developer and Marketing Agent. The Port Authority shall act as the developer (the **Developer**) and marketing agent for the Cooperative District with sole discretion for the development of and marketing for the Project in the Cooperative District.

(c) Initial Investment. Upon the Execution Date, each of the City, the County, and the Port Authority shall make $1,500,000.00 available for immediate use at, on, and for the Initial Infrastructure Improvements as defined in Section 2(c) (the **Initial Investment**). Each of the City, the County and the Port Authority shall appropriate the outstanding balance of the Initial Investment as necessary for each year in which an outstanding balance remains on each Initial Investment.

(d) Public Infrastructure Improvements. In its role as Developer, the Port Authority agrees to complete or cause the completion of the road improvements, utility projects and other infrastructure improvements necessitated by the Project as described on Exhibit B and as approved by the City and County (the **Initial Infrastructure Improvements**). Funds from the Initial Investment shall be used for such Initial Infrastructure Improvements. The Cooperative Parties shall collaborate through the JEDD with respect to capital improvements in the event that the Cooperative Parties determine that economic development in the JEDD District creates a demand for additional public infrastructure improvements serving the JEDD District or the area surrounding the JEDD District including, but not limited to, and solely upon the agreement of the Cooperative Parties, paying costs of infrastructure improvements within the JEDD District or, upon agreement of the Cooperative Parties, otherwise benefitting the JEDD District, which infrastructure improvements may include improvements relating to roads (as further provided in Section 2(e), water and sewer (except as provided in Section 2(f)), electric, natural gas, fiber, cable, or any other capital improvements directly supporting non-residential development within the JEDD District except as provided in Section 2(f) (collectively, the **Future Infrastructure Improvements**).

(e) Road Maintenance and Future Projects. The Cooperative Parties, including the Port Authority in its role as the Developer, shall use funds from the Initial Investment for all road installation, replacement, or pavement projects for so long as a balance remains outstanding on the Initial Investment. At such time as there is no longer any balance of the Initial Investment outstanding, the Contracting Parties shall reasonably and in good faith cooperate on the funding,

development, construction, and reconstruction of all road replacement and pavement projects in the Cooperative District.

(f) Utilities. The County shall maintain all utilities connecting to and located at the Cooperative District; provided, that the Cooperative Parties shall construct and maintain all water and sewer infrastructure on the Cooperative District with funds from the Initial Investment for so long as a balance remains outstanding on the Initial Investment. At such time as there is no longer any balance of the Initial Investment outstanding, the County shall maintain all water and sewer infrastructure at the Cooperative District.

Section 3. Terms of the JEDD.

(a) JEDD Agreement. The City and the Township will take all steps necessary to create and enter into a joint economic development district agreement (the **JEDD Agreement**) under ORC Section 715.72 in substantially the form attached hereto as Exhibit C, which JEDD Agreement shall contain the terms and provisions in this Section 3.

(b) JEDD Board. The JEDD Agreement shall provide for the governance of the JEDD by a board of directors (the **Board**) appointed as follows, pursuant to ORC Section 715.72(P)(2):

(i) The initial City member of the Board shall be _____. Subject to any applicable restrictions in ORC Section 715.72, all future City members of the Board shall be appointed by City Council and shall serve at the pleasure of City Council.

(ii) The initial Township member of the Board shall be _____. Subject to any applicable restrictions in ORC Section 715.72, all future Township members of the Board shall be appointed by a majority vote of the Board of Township Trustees and shall serve at the pleasure of the Board of Township Trustees.

(iii) The third member of the Board shall be nominated by the Port Authority and appointed by the unanimous vote of the initial City member and the initial Township member. Subject to any applicable restrictions in ORC Section 715.72, all future members of the Board selected pursuant to this Section 3(b)(iii) shall be nominated to the Board by the Port Authority and appointed by the unanimous vote of the City member and the Township member.

(iv) When applicable, the representative of the business owner or owners located in the JEDD District shall be appointed by mutual agreement of the City member and the Township member, provided that if the City member and the Township member do not so appoint a representative under this Section 3(b)(iv) within thirty (30) days after (A) the date that the first business becomes operational in the JEDD District, (B) the end of a term of office for a business owner representative, or (C) the occurrence of any other vacancy in the office of business owner representative, the chairperson of the Board shall notify the business with the greatest number of employees working in the JEDD District that said business is entitled to appoint the business owner representative, provided that any such appointment shall be made in writing by a duly authorized officer of the appointing business and delivered to the chairperson of the Board.

(iv) When applicable, the representative of the employees working in the JEDD District shall be appointed by mutual agreement of the City member and the Township member, provided that if the City member and the Township member do not so appoint a representative under this Section 3(b)(iv) within thirty (30) days after (A) the date that the first business becomes operational in the JEDD District, (B) the end of a term of office for a business owner representative, or (C) the occurrence of any other vacancy in the office of business owner representative, the chairperson of the Board shall notify the business with the greatest number of employees working in the JEDD District that said business is entitled to appoint the employee representative, provided that any such appointment shall be made in writing by a duly authorized officer of the appointing business and delivered to the chairperson of the Board.

(c) Power

(i) Territory. The JEDD District initially will include the property within the Cooperative Agreement. The Cooperative Parties will, from time to time and as necessary to accommodate proposed business development, cooperate with respect to additions of properties to the JEDD District under ORC Section 715.72(L), including where applicable and permitted under ORC Chapter 715 any properties located outside of the boundaries of the Cooperative District. For the avoidance of doubt, this Agreement shall not be interpreted to prohibit the Cooperative Parties from adding to the JEDD District a property outside of the Cooperative District or a property that does not meet the requirements of Section 2(a) hereof.

(ii) Term. The JEDD Agreement shall have a term of 30 years from its effective date and will automatically renew for one term of 30 years, unless either party acts to prevent such renewal according to terms of the JEDD Agreement.

(iii) Income Tax. The JEDD Agreement will provide for an income tax on income earned by persons working within the JEDD District and based on net profits of businesses located in the JEDD District at a rate equal to the income tax levied in the City at the time of the JEDD Agreement, subject to adjustment by the Board in the event of any change in the City income tax rate (the **Total Revenues**). The tax will be administered by the City, and distributed as follows:

(A) A reasonable amount of the total Revenues collected each year, as determined by the JEDD Board, shall be paid to the JEDD Board for the administrative expenses of the JEDD Board, after administrative expenses which may include reimbursement to the City for the time of employees of the City in collecting, administering, enforcing, and auditing the JEDD income tax applicable in the JEDD District in accordance with the JEDD Agreement, outside legal or accounting fees, the cost of public notice and the like have been deducted by the City; and

(B) The remaining amount of the Total Revenues collected each year after the application of Section 3(c)(iii)(A) shall be divided as follows: (I) 30% shall be paid to the City; (II) 30% shall be paid to Muskingum County; (III) 30% shall be paid to the Port Authority; and (IV) 10% shall be paid to the Township.

The foregoing allocations of income tax proceeds may be amended at any time by joint written agreement of the Contracting Parties pursuant to Section 6(h) hereof. At such time as the JEDD Board adopts the second resolution establishing an income tax in the JEDD District following its first resolution establishing an income tax and every other year thereafter, the JEDD Board will review the amount of its administrative expenses from the preceding two year period and include such findings in its determination of its reasonable administrative expenses for the succeeding resolutions establishing an income tax until such time as the Board makes a new finding under the JEDD Agreement.

(d) Authority. The JEDD Agreement will authorize the Board, among other things and with the consent and agreement of the City, the Township and, where applicable, the County and the Port Authority, to pay certain costs of such Future Infrastructure Improvements as may be necessary to support growth within the JEDD District.

(e) Incentives. Pursuant to ORC Section 715.72(U), throughout the term of the JEDD, the City and the Township shall each obtain the express written consent of the other prior to granting any tax exemption for any property in the JEDD District. The foregoing limitation shall apply solely to tax exemptions set forth in ORC Section 715.72(U), which include exemptions established pursuant to ORC Chapter 1728 and ORC Sections 3735.67, 5709.62, 5709.63, and 5709.632, as applicable.

(f) Expenses. Should the JEDD Board incur legal or other administrative expenses prior to the levying and collection of adequate Total Revenues, the Cooperative Parties shall equally share said expenses.

Section 4. Annexation Moratorium.

This Agreement shall be considered an Annexation Agreement pursuant to ORC Section 709.192. The City hereby agrees that, during the Initial Term or any Renewal Term of this Agreement, it shall not annex any real property within the Cooperative District. To the extent not prohibited by law, the City shall not accept any such annexation within the Cooperative District during the Initial Term or any Renewal Term of this Agreement.

Section 5. Port Authority Operational Funding.

For each year in which the Total Revenue exceeds $200,000.00, and if the Port Authority has received more than $1,500,000.00 in aggregate for all years pursuant to the distribution of the Total Revenue under Section 3(c)(iii) of this Agreement and the JEDD Agreement, the Port Authority shall not seek operational funding from the City or the County for that year, if reasonable.

Section 6. Other.

(a) Notices. Any notice or consent required or permitted to be given by or on behalf of either party to the other shall be given by mailing such notice or consent by United States certified or registered mail, postage prepaid and return receipt requested, or via a reputable express

overnight mail service which provides proof of delivery addressed to the parties as set forth below or at such other address as may be specified from time to time in writing delivered to the other party. Notices shall be effective upon receipt or refusal, as the case may be.

If to the County:	County of Muskingum, Ohio Attn: Board of County Commissioners 401 Main Street Zanesville, Ohio 43701 Phone: (740) 455-7100
If to the City:	City of Zanesville, Ohio Attn: Mayor 401 Market Street Zanesville, Ohio 43701 Phone: (740) 617-4908
If to the Township:	Township of Perry, Muskingum County, Ohio Attn: President 4625 Boggs Road Zanesville, Ohio 43701 Phone: (740) 819-2344
If to the Port Authority:	Zanesville-Muskingum County Port Authority Attn: Executive Director 205 North Fifth Street Zanesville, Ohio 43701 Phone: (740) 455-0742

(b) Waivers. All waivers of the provision of this Agreement must be in writing and signed by the appropriate authorities of the City, the County, the Port Authority, and the Township, and all amendments hereto must be in writing and signed by the appropriate authorities of the City, the County, the Port Authority, and the Township. No consent or waiver, express or implied, by either party to or of any breach of any covenant, condition, or duty of the other party shall be construed as a consent or waiver to or of any other breach of the same or any other covenant, condition or duty to be observed by the other party.

(c) Severability. In the event that any portions, sections or subsections of this Agreement are rendered invalid by the decision of any court or by the enactment of any law, ordinance or regulation, such provision of this Agreement will be deemed to have never been included therein and the balance of the Agreement shall continue in full force and effect.

(d) Authority. Each party to this Agreement hereby represents and warrants that it is executing this Agreement with the full and proper authority and that the parties whose names appear hereon are duly authorized and empowered to make and execute this Agreement and that this Agreement is supported by consideration.

(e) Counterparts. This Agreement may be executed in counterpart, and in several counterparts, each of which shall be regarded as an original and all of which shall constitute but one and the same Agreement.

(f) Further Actions. The Cooperative Parties agree to execute such additional documents, and take such further actions, as may reasonably be required to carry out the provisions and intent of this Agreement.

(g) In General. Except as otherwise provided in this Agreement, in the event of any default in or breach of this Agreement by either party hereto, or any successor to such party, such party (or successor) shall, within sixty (60) days of receipt of written notice from the other, proceed to cure or remedy such default or breach. In case such action is not taken or not diligently pursued, or the default or breach shall not be cured or remedied within a reasonable time, the aggrieved party may institute such proceedings as may be necessary or desirable in its opinion to cure and remedy such default or breach, including, but not limited to, proceedings to compel specific performance by the party in default or breach of its obligations. All rights and remedies shall be cumulative and shall not be construed to exclude any other remedies allowed at law or in equity.

(h) Amendments and Modifications. Except as otherwise provided herein, this Agreement may be amended by the Cooperative Parties only in writing and only following formal approval of the amendment by both the Board of Trustees of the Township, the City Council of the City, the Board of Commissioners of the County, and the Board of Directors of the Port Authority (the **Board of Directors**).

(i) Subject to Appropriation. The financial obligations of the City, the County, the Port Authority, and the Township, as applicable, under this Agreement are expressly subject to future ordinances or resolutions of the City Council, the Board of County Commissioners, the Board of Directors, or the Township Trustees, respectively, appropriating and authorizing the expenditure of such funds as are necessary to meet their respective financial obligations occurring after the current fiscal year. Those obligations, as applicable, are also subject to the certification of the City Auditor or his or her designee of the City, the County Auditor of the County, the Fiscal Officer of the Port Authority, or the the Township Fiscal Officer under ORC Sections 5705.41 and 5705.44. Notwithstanding anything to the contrary contained in this Agreement, however, the financial obligations of the City, the County, the Port Authority, and the Township, respectively, under this Agreement shall, to the extent funds are then available, be under the continuing obligation to appropriate the amount necessary to pay such obligations as they become due.

[Signature Pages Follow]

IN WITNESS WHEREOF, the City and the Township have caused this Agreement to be executed by their duly authorized officers as of the date first stated above.

CITY OF ZANESVILLE, OHIO

By: _____
Mayor

Approved as to form and correctness:

_____
Director of Law

[Signature Page to Cooperative Development Agreement]

TOWNSHIP OF PERRY,
MUSKINGUM COUNTY, OHIO

By: _____
Trustee

By: _____
Trustee

By: _____
Trustee

[Signature Page to Cooperative Development Agreement]

MUSKINGUM COUNTY, OHIO

By: _____
Commissioner

By: _____
Commissioner

By: _____
Commissioner

[Signature Page to Cooperative Development Agreement]

ZANESVILLE-MUSKINGUM
COUNTY PORT AUTHORITY

By: _____
Matt Abbott, Executive Director

[Signature Page to Cooperative Development Agreement]

CITY'S FISCAL OFFICER'S CERTIFICATE

The undersigned, Fiscal Officer of the City of Zanesville, Ohio, hereby certifies that the moneys required to meet the obligations of the City during the year 2020 under the foregoing Agreement have been lawfully appropriated by the City Council of the City of Zanesville, Ohio for such purpose and are in the treasury of the City or in the process of collection to the credit of an appropriate fund, free from any previous encumbrances. This Certificate is given in compliance with Ohio Revised Code Sections 5705.41 and 5705.44.

_____
Fiscal Officer
City of Zanesville, Ohio

Dated: [____], 2020

TOWNSHIP'S FISCAL OFFICER'S CERTIFICATE

The undersigned, Fiscal Officer of Perry Township, Muskingum County, Ohio, hereby certifies that the moneys required to meet the obligations of the Township during the year 2020 under the foregoing Agreement have been lawfully appropriated by the Board of Trustees of Perry Township, Muskingum County, Ohio for such purpose and are in the treasury of the Township or in the process of collection to the credit of an appropriate fund, free from any previous encumbrances. This Certificate is given in compliance with Ohio Revised Code Sections 5705.41 and 5705.44.

_____
Fiscal Officer
Perry Township, Muskingum County, Ohio

Dated: [____], 2020

COUNTY'S FISCAL OFFICER'S CERTIFICATE

The undersigned, County Auditor of Muskingum County, Ohio, hereby certifies that the moneys required to meet the obligations of the County during the year 2020 under the foregoing Agreement have been lawfully appropriated by the Board of Commissioners of Muskingum County, Ohio for such purpose and are in the treasury of the County or in the process of collection to the credit of an appropriate fund, free from any previous encumbrances. This Certificate is given in compliance with Ohio Revised Code Sections 5705.41 and 5705.44.

_____
County Auditor
Muskingum County, Ohio

Dated: [____], 2020

PORT AUTHORITY'S FISCAL OFFICER'S CERTIFICATE

The undersigned, fiscal officer of the Zanesville-Muskingum County Port Authority, hereby certifies that the moneys required to meet the obligations of the Port Authority during the year 2020 under the foregoing Agreement have been lawfully appropriated by the Board of Directors of the Zanesville-Muskingum County Port Authority for such purpose and are in the treasury of the Port Authority or in the process of collection to the credit of an appropriate fund, free from any previous encumbrances. This Certificate is given in compliance with Ohio Revised Code Sections 5705.41 and 5705.44.

_____
Fiscal Officer
Zanesville-Muskingum County Port Authority

Dated: [____], 2020

EXHIBIT A

MAP OF COOPERATIVE DISTRICT

[Map of Cooperative District]

EXHIBIT B

INITIAL INFRASTRUCTURE IMPROVEMENTS

EXHIBIT C

FORM OF JEDD AGREEMENT

[See Attached.]

OHIO REVISED CODE SECTION 715.72
EFFECTIVE AS OF DATE OF PETITION

(A) As used in this section:

(1) "Contracting parties" means one or more municipal corporations, one or more townships, and, under division (D) of this section, one or more counties that have entered into a contract under this section to create a joint economic development district.

(2) "District" means a joint economic development district created under this section.

(3) "Contract for utility services" means a contract under which a municipal corporation agrees to provide to a township or another municipal corporation water, sewer, electric, or other utility services necessary to the public health, safety, and welfare.

(4) "Business" means a sole proprietorship, a corporation for profit, a pass-through entity as defined in section 5733.04 of the Revised Code, the federal government, the state, the state's political subdivisions, a nonprofit organization, or a school district.

(5) "Owner" means a partner of a partnership, a member of a limited liability company, a majority shareholder of an S corporation, a person with a majority ownership interest in a pass- through entity, or any officer, employee, or agent with authority to make decisions legally binding upon a business.

(6) "Record owner" means the person or persons in whose name a parcel is listed on the tax list or exempt list compiled by the county auditor under section 319.28 or 5713.08 of the Revised Code.

(7) A business "operates within" a district if the net profits of the business or the income of employees of the business would be subject to an income tax levied within the district.

(8) An employee is "employed within" a district if any portion of the employee's income would be subject to an income tax levied within the district.

(9) "Mixed-use development" means a real estate project that tends to mitigate traffic and sprawl by integrating some combination of retail, office, residential, hotel, recreation, and other functions in a pedestrian-oriented environment that maximizes the use of available space by allowing members of the community to live, work, and play in one architecturally expressive area with multiple amenities.

(B) This section provides alternative procedures and requirements to those set forth in sections 715.70 and 715.71 of the Revised Code for creating and operating a joint economic development district. This section applies to municipal corporations and townships that are located in the same county or in adjacent counties.

(C) One or more municipal corporations, one or more townships, and, under division (D) of this section, one or more counties may enter into a contract pursuant to which they designate one or

more areas as a joint economic development district for the purpose of facilitating economic development and redevelopment, to create or preserve jobs and employment opportunities, and to improve the economic welfare of the people in this state and in the area of the contracting parties.

(1) Except as otherwise provided in division (C)(2) of this section, the territory of each of the contracting parties shall be contiguous to the territory of at least one other contracting party, or contiguous to the territory of a township, municipal corporation, or county that is contiguous to another contracting party, even if the intervening township or municipal corporation is not a contracting party.

(2) Contracting parties that have entered into a contract under section 715.70 or 715.71 of the Revised Code creating a joint economic development district prior to November 15, 1995, may enter into a contract under this section even if the territory of each of the contracting parties is not contiguous to the territory of at least one other contracting party, or contiguous to the territory of a township or municipal corporation that is contiguous to another contracting party as otherwise required under division (C)(1) of this section. The contract and district shall meet the requirements of this section.

(D) If, on or after December 30. 2008. but on or before June 30, 2009, one or more municipal corporations and one or more townships enter into a contract or amend an existing contract under this section, one or more counties in which all of those municipal corporations or townships are located also may enter into the contract as a contracting party or parties.

(E)

(1) The area or areas to be included in a joint economic development district shall meet all of the following criteria:

(a) The area or areas shall be located within the territory of one or more of the contracting parties and may consist of all of the territory of any or all of the contracting parties.

(b) No electors, except those residing in a mixed-use development, shall reside within the area or areas on the effective date of the contract creating the district.

(c) The area or areas shall not include any parcel of land owned in fee by or leased to a municipal corporation or township, unless the municipal corporation or township is a contracting party or has given its consent to have the parcel of land included in the district by the adoption of an ordinance or resolution.

(2) The contracting parties may designate excluded parcels within the boundaries of the joint economic development district. Excluded parcels are not part of the district and persons employed or residing on such parcels shall not be subject to any income tax imposed within the district under division (F)(5) of this section.

(F)

(1) The contract creating a joint economic development district shall provide for the amount or nature of the contribution of each contracting party to the development and operation of the district and may provide for the sharing of the costs of the operation of and improvements for the district. The contributions may be in any form to which the contracting parties agree and may include, but are not limited to. the provision of services, money, real or personal property, facilities, or equipment.

(2) The contract may provide for the contracting parties to share revenue from taxes levied by one or more of the contracting parties if those revenues may lawfully be applied to that purpose under the legislation by which those taxes are levied.

(3) The contract shall include an economic development plan for the district that consists of a schedule for the provision of new, expanded, or additional services, facilities, or improvements. The contract may provide for expanded or additional capacity for or other enhancement of existing services, facilities, or improvements.

(4) The contract shall enumerate the specific powers, duties, and functions of the board of directors of the district described under division (P) of this section and shall designate procedures consistent with that division for appointing members to the board. The contract shall enumerate rules to govern the board in carrying out its business under this section.

(5)

(a) The contract may grant to the board the power to adopt a resolution to levy an income tax within the entire district or within portions of the district designated by the contract. The income tax shall be used to carry out the economic development plan for the district or the portion of the district in which the tax is levied and for any other lawful purpose of the contracting parties pursuant to the contract, including the provision of utility services by one or more of the contracting parties.

(b) An income tax levied under this section shall be based on both the income earned by persons employed or residing within the district and the net profit of businesses operating within the district.

Except as provided in this section, the income tax levied within the district is subject to Chapter 718. of the Revised Code, except that no vote shall be required. The rate of the income tax shall be no higher than the highest rate being levied by a municipal corporation that is a contracting party.

(c) If the board adopts a resolution to levy an income tax, it shall enter into an agreement with a municipal corporation that is a contracting party to administer, collect, and enforce the income tax on behalf of the district.

(d) A resolution levying an income tax under this section shall require the contracting parties to annually set aside a percentage, to be stated in the resolution, of the amount of the income tax collected for the long-term maintenance of the district.

(e) An income tax levied under this section shall apply in the district or the portion of the district in which the contract authorizes an income tax throughout the term of the contract creating the district. The tax shall not apply to any persons employed or residing on a parcel excluded from the district under division (E)(2) of this section.

(6) If there is unincorporated territory in the district, the contract shall specify that restrictions on annexation proceedings under division (R) of this section apply to such unincorporated territory. The contract may prohibit proceedings under Chapter 709. of the Revised Code proposing the annexation to. merger of. or consolidation with a municipal corporation that is a contracting party of any unincorporated territory within a township that is a contracting party during the term of the contract regardless of whether that territory is located within the district.

(7) The contract may designate property as a community entertainment district, or may be amended to designate property as a community entertainment district, as prescribed in division (D) of section 4301.80 of the Revised Code. A contract or amendment designating a community entertainment district shall include all information and documentation described in divisions (B)(1) to (6) of section 4301.80 of the Revised Code. The public notice required under division (I) of this section shall specify that the contract designates a community entertainment district and describe the location of that district. Except as provided in division (F) of section 4301.80 of the Revised Code, an area designated as a community entertainment district under a joint economic development district contract shall not lose its designation even if the contract is canceled or terminated.

(G) The contract creating a joint economic development district shall continue in existence throughout its term and shall be binding on the contracting parties and on any parties succeeding to the contracting parties, whether by annexation, merger, or consolidation. Except as provided in division (H) of this section, the contract may be amended, renewed, or terminated with the approval of the contracting parties or any parties succeeding to the contracting parties. If the contract is amended to add or remove an area to or from an existing district, the amendment shall be adopted in the manner prescribed under division (L) of this section.

(H) If two or more contracting parties previously have entered into a separate contract for utility services, then amendment, renewal, or termination of the separate contract for utility services shall not constitute any part of the consideration for the contract creating a joint economic development district. A contract creating a joint economic development district shall be rebuttably presumed to violate this division if it is entered into within two years prior or five years subsequent to the amendment, renewal, or termination of a separate contract for utility services that two or more contracting parties previously have entered into. The presumption stated in this division may be rebutted by clear and convincing evidence of both of the following:

(1) That other substantial consideration existed to support the contract creating a joint economic development district;

(2) That the contracting parties entered into the contract creating a joint economic development district freely and without duress or coercion related to the amendment, renewal, or termination of the separate contract for utility services.

A contract creating a joint economic development district that violates this division is void and unenforceable.

(I)

(1) Before the legislative authority of any of the contracting parties adopts an ordinance or resolution approving a contract to create a district, the legislative authority of each of the contracting parties shall hold a public hearing concerning the contract and district. Each legislative authority shall provide at least thirty days' public notice of the time and place of the public hearing in a newspaper of general circulation in the municipal corporation, township, or county, as applicable. During the thirty-day period prior to the public hearing and until the date that an ordinance or resolution is adopted under division (K) of this section to approve the joint economic development district contract, all of the following documents shall be available for public inspection in the office of the clerk of the legislative authority of a municipal corporation and county that is a contracting party and in the office of the fiscal officer of a township that is a contracting party:

(a) A copy of the contract creating the district, including the economic development plan for the district and the schedule for the provision of new, expanded, or additional services, facilities, or improvements described in division (F)(3) of this section;

(b) A description of the area or areas to be included in the district, including a map in sufficient detail to denote the specific boundaries of the area or areas and to indicate any zoning restrictions applicable to the area or areas, and the parcel number, provided for under section 319.28 of the Revised Code, of any parcel located within the boundaries of the joint economic development district and excluded from the district under division (E)(2) of this section;

(c) If the contract authorizes the board of directors of the district to adopt a resolution to levy an income tax within the district or within portions of the district, a schedule for the collection of the tax.

(2) A public hearing held under this division shall allow for public comment and recommendations on the contract and district. The contracting parties may include in the contract any of those recommendations prior to approval of the contract.

(J) Before any of the contracting parties approves a contract under division (K) of this section, the contracting parties shall circulate one or more petitions to record owners of real property located within the proposed joint economic development district and owners of businesses operating within the proposed district. The petitions shall state that all of the documents described in divisions (I)(1)(a) to (c) of this section are available for public inspection in the office of the clerk of the legislative authority of each municipal corporation and county that is a contracting party or the office of the fiscal officer of each township that is a contracting party. The petitions shall clearly indicate that, by signing the petition, the record owner or owner consents to the proposed joint economic development district.

A contracting party may send written notice of the petitions by certified mail with return receipt requested to the last known mailing addresses of any or all of the record owners of real property located within the proposed district or the owners of businesses operating within the proposed district. The contracting parties shall equally share the costs of complying with this division.

(K)

(1) After the public hearings required under division (I) of this section have been held and the petitions described in division (J) of this section have been signed by the majority of the record owners of real property located within the proposed joint economic development district and by a majority of the owners of businesses, if any, operating within the proposed district, each contracting party may adopt an ordinance or resolution approving the contract to create a joint economic development district. Not later than ten days after all of the contracting parties have adopted ordinances or resolutions approving the district contract, each contracting party shall give notice of the proposed district to all of the following:

(a) Each record owner of real property to be included in the district and in the territory of that contracting party who did not sign the petitions described in division (J) of this section;

(b) An owner of each business operating within the district and in the territory of that contracting party no owner of which signed the petitions described in division (J) of this section.

(2) Such notices shall be given by certified mail and shall specify that the property or business is located within an area to be included in the district and that all of the documents described in divisions (I)(l)(a) to (c) of this section are available for public inspection in the office of the clerk of the legislative authority of each municipal corporation and county that is a contracting party or the office of the fiscal officer of each township that is a contracting party. The contracting parties shall equally share the costs of complying with division (K) of this section.

(L)

(1) The contracting parties may amend the joint economic development district contract to add any area that was not originally included in the district if the area satisfies the criteria prescribed under division (E) of this section. The contracting parties may also amend the district contract to remove any area originally included in the district or exclude one or more parcels located within the district pursuant to division (E)(2) of this section.

(2) An amendment adding an area to a district, removing an area from the district, or excluding one or more parcels from the district may be approved only by a resolution or ordinance adopted by each of the contracting parties. The contracting parties shall conduct public hearings on the amendment and provide notice in the manner required under division (I) of this section for original contracts. The contracting parties shall make available for public inspection a copy of the amendment, a description of the area to be added, removed, or excluded to or from the district, and a map of that area in sufficient detail to denote the specific boundaries of the area and to indicate any zoning restrictions applicable to the area.

(3) Before adopting a resolution or ordinance approving the addition of an area to the district, the contracting parties shall circulate petitions to the record owners of real property located within the proposed addition to the district and owners of businesses operating within the proposed addition to the district in the same manner required under division (J) of this section for original contracts. The contracting parties may notify such record owners of real property and owners of businesses that the petitions are available for signing in the same manner provided by that division. The contracting parties shall equally share the costs of complying with this division.

(4) The contracting parties to a joint economic development district may vote to approve an amendment to the district contract under this division after the public hearings required under division (L)(2) of this section are completed and, if the amendment adds an area or areas to the district, the petitions required under division (L)(3) of this section have been signed by the majority of record owners of real property located within the area or areas added to the district and by a majority of the owners of businesses, if any, operating within the proposed addition to the district.

(5) Not later than ten days after all of the contracting parties have adopted ordinances or resolutions approving an amendment adding one or more areas to the district, each contracting party shall give notice of the addition to all of the following:

(a) Each record owner of real property to be included in the addition to the district and in the territory of that contracting party who did not sign the petitions described in division (L)(3) of this section;

(b) An owner of each business operating within the addition to the district and in the territory of that contracting party no owner of which signed the petitions described in division (L)(3) of this section.

The contracting parties shall equally share the costs of complying with division (L)(5) of this section.

(M)

(1) A board of township trustees that is a party to a contract creating a joint economic development district may choose not to submit its resolution approving the contract to the electors of the township if all of the following conditions are satisfied:

(a) The resolution has been approved by a unanimous vote of the members of the board of township trustees or. if a county is one of the contracting parties under division (D) of this section, the resolution has been approved by a majority vote of the members of the board of township trustees;

(b) The contracting parties have circulated petitions as required under division (J) of this section and obtained the signatures required under division (L) of this section;

(c) The territory to be included in the proposed district is zoned in a manner appropriate to the function of the district.

(2) If the board of township trustees has not invoked its authority under division (M)(l) of this section, the board, at least ninety days before the date of the election, shall file its resolution approving the district contract with the board of elections for submission to the electors of the township for approval at the next succeeding general, primary, or special election.

(3) Any contract creating a district in which a board of township trustees is a party shall provide that the contract is not effective before the thirty-first day after its approval, including approval by the electors of the township if required by this section.

(4) If the board of township trustees invokes its authority under division (M)(l) of this section and does not submit the district contract to the electors for approval, the resolution of the board of township trustees approving the contract is subject to a referendum of the electors of the township when requested through a petition. When signed by ten per cent of the number of electors in the township who voted for the office of governor at the most recent general election, a referendum petition asking that the resolution be submitted to the electors of the township may be presented to the board of township trustees. Such a petition shall be presented within thirty days after the board of township trustees adopts the resolution approving the district contract. The board of township trustees shall, not later than four p.m. of the tenth day after receipt of the petition, certify the text of the resolution to the board of elections. The board of elections shall submit the resolution to the electors of the township for their approval or rejection at the next general, primary, or special election occurring at least ninety days after certification of the resolution.

(N) The ballot respecting a resolution to create a district or a referendum of such a resolution shall be in the following form:

"Shall the resolution of the board of township trustees approving the contract with..... (here insert name of every other contracting party) for the creation of a joint economic development district be approved?

FOR THE RESOLUTION AND CONTRACT

AGAINST THE RESOLUTION AND CONTRACT

If a majority of the electors of the township voting on the issue vote for the resolution and contract, the resolution shall become effective immediately and the contract shall go into effect on the thirty-first day after the election or thereafter in accordance with terms of the contract.

(O) Upon the creation of a district under this section, one of the contracting parties shall file a copy of each of the following documents with the director of development services:

(1) All of the documents described in divisions (I)(l)(a) to (c) of this section;

(2) Certified copies of the ordinances and resolutions of the contracting parties relating to the contract and district;

(3) Documentation from each contracting party that the public hearings required by division (I) of this section have been held, the date of the hearings, and evidence that notice of the hearings was published as required by that division;

(4) A copy of the signed petitions required under divisions (J) and (K) of this section.

(P) A board of directors shall govern each district created under this section.

(1) If there are businesses operating and persons employed within the district, the board shall be composed of the following members:

(a) One member representing the municipal corporations that are contracting parties;

(b) One member representing the townships that are contracting parties;

(c) One member representing the owners of businesses operating within the district;

(d) One member representing the persons employed within the district;

(e) One member representing the counties that are contracting parties, or. if no contracting party is a county, one member selected by the members described in divisions (P)(l)(a) to (d) of this section.

The members of the board shall be appointed as provided in the district contract. Of the members initially appointed to the board, the member described in division (P)(l)(a) of this section shall serve a term of one year; the member described in division (P)(l)(b) of this section shall serve a term of two years; the member described in division (P)(l)(c) of this section shall serve a term of three years; and the members described in divisions (P)(l)(d) and (e) of this section shall serve terms of four years. Thereafter, terms for each member shall be for four years, each term ending on the same day of the same month of the year as did the term that it succeeds. A member may be reappointed to the board, but no member shall serve more than two consecutive terms on the board.

The member described in division (P)(l)(e) of this section shall serve as chairperson of the board described under division (P)(l) of this section.

(2) If there are no businesses operating or persons employed within the district, the board shall be composed of the following members:

(a) One member representing the municipal corporations that are contracting parties;

(b) One member representing the townships that are contracting parties;

(c) One member representing the counties that are contracting parties, or if no contracting party is a county, one member selected by the members described in divisions (P)(2)(a) and (b) of this section.

The members of the board shall be appointed as provided in the district contract. Of the members initially appointed to the board, the member described in division (P)(2)(a) of this section shall serve a term of one year; the member described in division (P)(2)(b) of this section shall serve a term of two years; and the member described in division (P)(2)(c) of this section shall serve a term of three years. Thereafter, terms for each member shall be for four years, each term ending on the same day of the same month of the year as did the term that it succeeds. A member may be reappointed to the board, but no member shall serve more than two consecutive terms on the board.

The member described in division (P)(2)(c) of this section shall serve as chairperson of a board described under division (P)(2) of this section.

(3) A board described under division (P)(l) or (2) of this section has no powers except as described in this section and in the contract creating the district.

(4) Membership on the board of directors of a joint economic development district created under this section is not the holding of a public office or employment within the meaning of any section of the Revised Code prohibiting the holding of other public office or employment. Membership on such a board is not a direct or indirect interest in a contract or expenditure of money by a municipal corporation, township, county, or other political subdivision with which a member may be affiliated. Notwithstanding any provision of law to the contrary, no member of a board of directors of a joint economic development district shall forfeit or be disqualified from holding any public office or employment by reason of membership on the board.

(5) The board of directors of a joint economic development district is a public body for the purposes of section 121.22 of the Revised Code. Chapter 2744. of the Revised Code applies to such a board and the district.

(Q)

(1) On or before the date occurring six months after the effective date of the district contract, an owner of a business operating within the district may, on behalf of the business and its employees, file a complaint with the court of common pleas of the county in which the majority of the territory of the district is located requesting exemption from any income tax imposed by the board of directors of the district under division (F)(5) of this section if all of the following apply:

(a) The business operated within an unincorporated area of the district before the effective date of the district contract;

(b) No owner of the business signed a petition described in division (J) of this section;

(c) Neither the business nor its employees has derived or will derive any material benefit from the new, expanded, or additional services, facilities, or improvements described in the economic development plan for the district, or the material benefit that has, or will be. derived is negligible in comparison to the income tax revenue generated from the net profits of the business and the income of employees of the business.

The legislative authority of each contracting party shall be made a party to the proceedings and the business owner filing the complaint shall serve notice of the complaint by certified mail to each such contracting party. The court shall not accept any complaint filed more than six months after the effective date of the district contract.

(2) Any or all of the contracting parties may submit a written answer to the complaint submitted under division (Q)(l) of this section to the court within thirty days after notice of the complaint was served upon them. Such a contracting party shall submit to the court, along with the answer, documentation sufficient to prove that the contracting party sent copies of the answer to the owner of the business who filed the complaint.

(3) The court shall review each complaint submitted by a business owner under division (0) (1) of this section and each answer submitted by a contracting party under division (Q)(2) of this section. The court may make a determination on the record and the evidence thus submitted, or it may conduct a hearing and request the presence of the business owner and the contracting parties to present evidence relevant to the complaint. The court shall make a determination on the complaint not sooner than thirty days but not later than sixty days after the complaint is filed by the business owner. The court may make a determination more than sixty days after the complaint is filed if the business owner and all contracting parties to the district consent.

(4) The court shall grant the exemption requested in the complaint if all of the criteria described in divisions (Q)(l)(a) to (c) of this section are met.

(5) If all the criteria described in divisions (Q)(l)(a) to (c) of this section are not met, the court shall deny the complaint and the exemption.

(6) The court shall send notice of the determination with respect to the complaint to the owner of the business and each contracting party. If the court grants the exemption, the net profits of the business from operations within the district and the income of its employees from employment within the district are exempt from any income tax imposed by the board of directors of the district. If the court denies the exemption, the net profits of the business and the income of its employees shall be taxed according to the terms of the district contract and any taxes, penalties, and interest accrued before the date of the court's determination shall be paid in full. In addition, no owner of the business may submit another complaint under division (Q)(l) of this section for the same district contract. The court's determination on a complaint filed under division (0) of this section is final.

(7) Chapter 2506. of the Revised Code does not apply to the proceedings described in division (0) of this section.

(R)

(1) No proceeding pursuant to Chapter 709. of the Revised Code that proposes the annexation to, merger of, or consolidation with a municipal corporation of any unincorporated territory within a joint economic development district may be commenced at any time between the effective date of the contract creating the district and the date the contract expires, terminates, or is otherwise

rendered unenforceable. This division does not apply if each board of township trustees whose territory is included within the district and whose territory is proposed to be annexed, merged, or consolidated adopts a resolution consenting to the commencement of the proceeding. Each such board of township trustees shall file a copy of the resolution with the clerk of the legislative authority of each county within which a contracting party is located.

(2) The contract creating a joint economic development district may prohibit any annexation proceeding by a contracting municipal corporation of any unincorporated territory within the district or zone beyond the period described in division (R)(l) of this section.

(3) No contracting party is divested or relieved of its rights or obligations under the contract creating a joint economic development district because of annexation, merger, or consolidation.

(S) Contracting parties may enter into agreements pursuant to the contract creating a joint economic development district with respect to the substance and administration of zoning and other land use regulations, building codes, permanent public improvements, and other regulatory and proprietary matters determined to be for a public purpose. No contract, however, shall exempt the territory within the district from the procedures of land use regulation applicable pursuant to municipal corporation, township, and county regulations, including, but not limited to. zoning procedures.

(T) The powers granted under this section are in addition to and not in the derogation of all other powers possessed by or granted to municipal corporations, townships, and counties pursuant to law.

(1) When exercising a power or performing a function or duty under a contract entered into under this section, a municipal corporation may exercise all the powers of a municipal corporation, and may perform all the functions and duties of a municipal corporation, within the district, pursuant to and to the extent consistent with the contract.

(2) When exercising a power or performing a function or duty under a contract entered into under division (D) of this section, a county may exercise all of the powers of a county, and may perform all the functions and duties of a county, within the district pursuant to and to the extent consistent with the contract.

(3) When exercising a power or performing a function or duty under a contract entered into under this section, a township may exercise all the powers of a township, and may perform all the functions and duties of a township, within the district, pursuant to and to the extent consistent with the contract.

(U) No political subdivision shall grant any tax exemption under Chapter 1728. or section 3735.67. 5709.62. 5709.63. or 5709.632 of the Revised Code on any property located within the district without the consent of all the contracting parties. The prohibition against granting a tax exemption under this section does not apply to any exemption filed, pending, or approved before the effective date of the contract entered into under this section.

Amended by 131st General Assembly File No. TBD, HB 182, §1, eff. 9/13/2016.

Effective Date: 03-22-1999; 2008 SB129 12-30-2008

Ways and Means Committee
Ann Gildow - Chairperson

ORDINANCE NO. 2020-__71____
INTRODUCED BY COUNCIL

AN ORDINANCE REPEALING ORDINANCE 19-96

WHEREAS, on or about September 9, 2019, Zanesville City Council passed Ordinance 19-96, titled "An Ordinance authorizing the proper City official to enter into an agreement with Compucorp as the internet service provider for Zanesville Downtown Fiberoptic Network"; and

WHEREAS, the agreement between the City and Compucorp was not executed before the end of 2019; and

WHEREAS, R.C. Section 731.48 states, "Contract Restrictions: The legislative authority of a municipal corporation shall not enter into any contract which is not to go into full operation during the term for which all the members of such legislative authority are elected"; and

WHEREAS, because the Compucorp agreement was not executed in 2019, the agreement became null and void; and

WHEREAS, the City has determined, in light of the recent COVID-related emergency, to utilize the grant funding originally slated for Compucorp for more urgent community health-related purposes; and

WHEREAS, in an effort to effectively organize the Ordinances of the City of Zanesville, it was determined that Ordinance 19-96 should be repealed.

NOW, THEREFORE, BE IT ORDAINED by the Council of the City of Zanesville, State of Ohio, that:

SECTION ONE: Zanesville City Ordinance 19-96, titled "An Ordinance authorizing the proper City official to enter into an agreement with Compucorp as the internet service provider for Zanesville Downtown Fiberoptic Network", is hereby repealed in its entirety.

SECTION TWO: It is found that all formal actions of this Council concerning and relating to the adoption of this Ordinance were adopted in an open meeting of this Council, and that all deliberations of this Council that resulted in this formal action were in meetings open to the public in compliance with all legal requirements, including §121.22 of the Ohio Revised Code, and the Rules of this Council.

SECTION THREE: This Ordinance shall take effect and be in force from and after the earliest period allowed by law.

PASSED: _____, 2020

ATTEST:_____
Susan Culbertson
Clerk of Council

_____
Daniel M. Vincent
President of Council

APPROVED: _____, 2020

This legislation approved as to form:

_____
Don Mason, Mayor

_____
Law Director's Office

Public Service Committee
Andrew Roberts, Chair

ORDINANCE NO. 2020 - 72
INTRODUCED BY COUNCIL

AN ORDINANCE FOR THE OHIO DEPARTMENT OF NATURAL RESOURCES DIVISION OF MINERAL RESOURCE MANAGEMENT REGARDING BRINE SOLUTION USE.

WHEREAS, in 2016, the City of Zanesville passed Resolution 16-41 in order to utilize liquid brine solution for winter ice control, in accordance with guidelines provided in Ohio Revised Code Section 1509.226; and

WHEREAS, brine application is approved by the Ohio Department of Natural Resource (ODNR) Division of Mineral Resources Management; and

WHEREAS, the City of Zanesville no longer utilizes brine application for winter ice control and now must notify ODNR in order to be placed as an inactive user.

NOW, THEREFORE, BE IT RESOLVED by the Council of the City of Zanesville, State of Ohio, that:

SECTION ONE: The proper city official is authorized to notify the Ohio Department of Natural Resources Division of Mineral Resources that the City of Zanesville no longer utilizes brine application and is no longer in need of a brine water permit for winter ice control.

SECTION TWO: This Ordinance shall take effect and be in force from and after the earliest period allowed by law.

PASSED: _____, 2020

ATTEST:

SUSAN CULBERTSON
Clerk of Council

DANIEL M. VINCENT
President of Council

APPROVED: _____, 2020

DONALD MASON
Mayor

THIS LEGISLATION APPROVED AS TO FORM

LAW DIRECTOR'S OFFICE

Public Service Committee
Andrew Roberts, Chair

ORDINANCE NO. 2020 - 73
INTRODUCED BY COUNCIL

AN ORDINANCE AUTHORIZING THE PROPER CITY OFFICIAL TO ENTER INTO A PROFESSIONAL CONTRACT WITH ADR FOR THE PRELIMINARY ENGINEERING SERVICES FOR THE MUSKINGUM AVENUE (DUG ROAD) IMPROVEMENTS, AND DECLARING AN EMERGENCY.

WHEREAS, the City of Zanesville selected ADR per Ohio Revised Code 153.65 – 153.71 on April 30, 2020 for the Muskingum Avenue (Dug Road) Improvements project; and

WHEREAS, the administration would like to proceed with the preliminary engineering as detailed in Attachment A; and

WHEREAS, ODOT will begin a major reconstruction of I-70 in 2021 which will disrupt traffic and send motorists to alternate routes; and

WHEREAS, to expeditiously complete the Muskingum Avenue Improvements project and provide for an alternate route which will promote highway safety during the I-70 reconstruction project, this ordinance needs passage as an emergency.

NOW, THEREFORE, BE IT ORDAINED by the Council of the City of Zanesville, State of Ohio, that:

SECTION ONE: The proper City official is hereby authorized to enter into a professional contract with ADR for the preliminary engineering of the Muskingum Avenue (Dug Road) Improvements project.

SECTION TWO: The cost for these services is estimated to be $175,150.00 and shall be paid from Line Item 101-7791-53225.

SECTION THREE: For the reasons stated above, this Ordinance is declared to be an emergency measure. Provided it receives the affirmative vote of six (6) or more members of City Council, this Ordinance shall take effect and be in force immediately upon its passage and approval of the Mayor. Otherwise, it shall take effect and be in force from and after the earliest period allowed by law.

PASSED: _____, 2020

ATTEST:

SUSAN CULBERTSON,
Clerk of Council

DANIEL M. VINCENT,
President of Council

APPROVED: _____, 2020

DONALD MASON,
Mayor

THIS LEGISLATION APPROVED AS TO FORM

LAW DIRECTOR'S OFFICE

Ordinance 2020-73
Attachment A

ADR & ASSOCIATES, LTD.
Design . Engineering . Innovation

ENGINEERING & SURVEYING SERVICES PROPOSAL

5/14/2020

MUSKINGUM AVENUE (DUG ROAD) IMPROVEMENTS

FOR:

City of Zanesville

CITY OF ZANESVILLE 1797

Council-Mayor Government
Don Mason, Mayor

ADR & ASSOCIATES, LTD. 88 WEST CHURCH STREET, NEWARK, OHIO 43055 PHONE.740-345-1921
www.adrinnovation.com

Ordinance 2020-73
Attachment A

ADR & Associates, Ltd.
88 West Church St.
Newark, Ohio 43055
740-345-1921
Fax 740-345-4994

Clientcentric Consulting
Design . Engineering . Innovation

May 14, 2020

Charles M. Saunders, P.E., City Engineer
City of Zanesville, Department of Public Service
401 Market Street
Zanesville, OH 43701

RE: Muskingum Avenue (Dug Road) Improvements
Engineering & Surveying Services Proposal

Dear Mr. Saunders,

Thank you for this opportunity to submit the enclosed scope, fee and contract proposal to perform Phases I & II engineering services for your Muskingum Avenue (Dug Road) Improvements project.

ADR is available to start work on your project immediately upon authorization to proceed.

Please keep us in mind for all your future Planning, Surveying, Engineering, and Environmental needs.

If you have any questions, please do not hesitate to contact Ronald Bonnette at 740-345-1921 or email him at rbonnette@adrinnovation.com.

Sincerely,
ADR & Associates, Ltd.

Douglas E. Mill
CEO

Ronald Bonnette, PE, PS
Project Manager

Scope of Services & Price Proposal

Given Information:

Overview

It is the desire of the City of Zanesville to make improvements necessary to reopen Muskingum Avenue to the traveling public between Pine Street and the railroad crossing approximately 1500 feet to the east. The project scope of services is expected to include geotechnical analysis, preparing civil engineering design alternatives with associated cost estimates, preparing construction plans and bidding documents, securing project funding, and providing construction engineering services.

Muskingum Avenue is prone to rock and tree falls due to the steep weathered rock cut slope along the south side of the roadway and lack of an adequate safety shoulder for debris to land. On the north side of the roadway there is another steep slope downward to the Muskingum River that has slip prone areas. The roadway was initially closed in early 2017 due to the increasing frequency of rock and tree falls. Resulting concerns from the public regarding delay of essential public safety services and access to residences and businesses on either end of the corridor led the City to reopen the road in late 2017 by limiting travel to the north lane with timed traffic signals on either end of the roadway to allow for alternating traffic and with a portable concrete barrier wall in between the signals to protect from falling debris. Unfortunately, in February of 2019 a significant slip developed along the north side edge of the pavement and the combination of hazards to the public from above and below have left the roadway completely closed since.

This portion of Muskingum Avenue is an important thoroughfare within the City of Zanesville. The road is a local connector between two federal routes, US 40 and US 22/SR 60. It serves as an important transportation link from the southern part of the city to the downtown and handles traffic from both downtown bridges, the 6th Street Bridge and the world-famous Y Bridge. A closure of either of the two bridges for routine or emergency work causes this street route to act as the local detour.

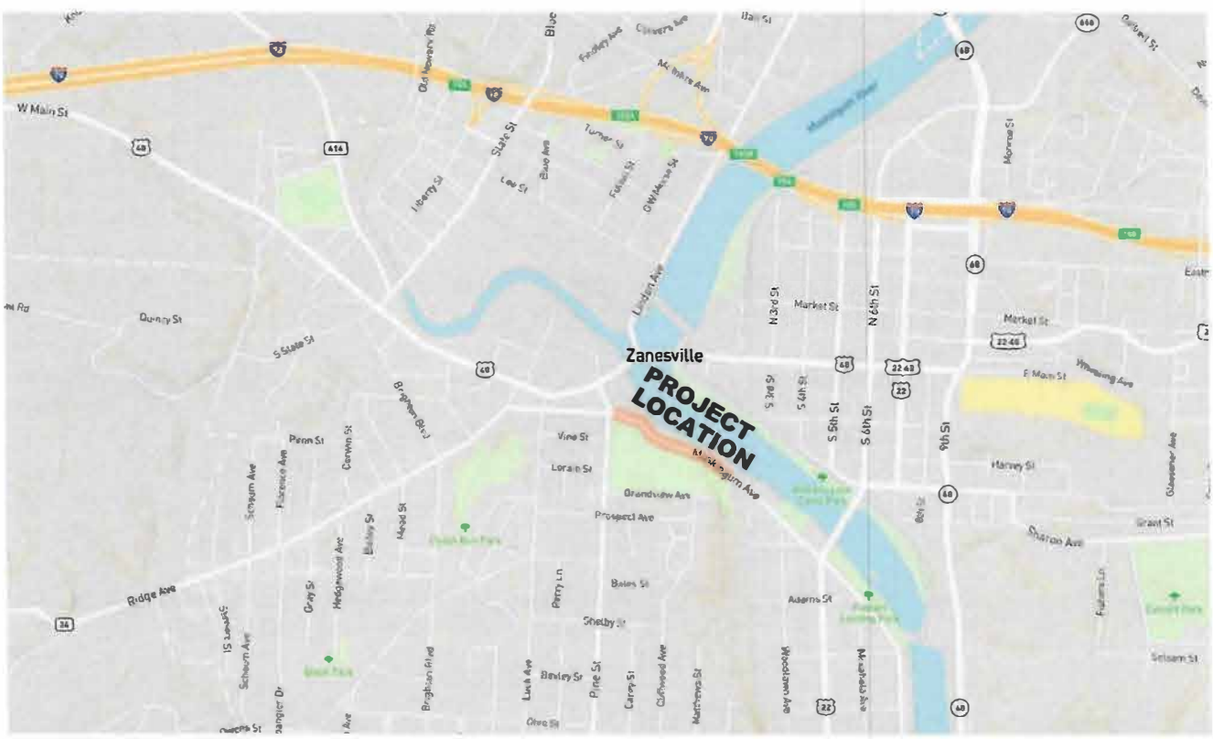

Scope of Services & Price Proposal

Given Information:

Project Description

The consultant shall provide engineering services to design, bid, fund, and construct the improvements necessary to reopen Muskingum Avenue to the traveling public and to reconstruct the roadway from Pine Street to the railroad crossing.

Phase 1 - Preliminary Phase

a. Identify all required information needed.
b. Consultant will provide the city with a proposal for engineering costs and a tentative scope of services.
c. Meet with the city to discuss the proposal and finalize with council approval.

Phase II – Planning & Preliminary Phase

a. Perform engineering field surveying as required for plan development.
b. Conduct geotechnical investigation and provide report to support engineering design.
c. Coordinate with all utilities within the corridor for existing alignments.
d. Provide at least 2 design alternatives with cost estimates to remediate the rock cut slope.
e. Provide at least 2 design alternatives with cost estimates to repair the north side slip.
f. Meet with the city to discuss and finalize selected alternatives.

Phase III – Design & Funding Phase

a. Prepare final construction plans for the selected alternatives chosen to complete the project improvements.
b. Provide a final cost estimate for the construction of the improvements to be used for securing funding and the legislation to authorize the bidding of the project.
c. Seek, recommend, and prepare grant and/or loan applications as necessary to fund the project.

Phase IV – Bid Phase

a. Prepare bid specifications and contract documents.
b. Attend a pre-bid conference with prospective contractors.
c. Review bids, prepare bid tabulation, and make recommendation for award / or rejection.

Phase V – Construction Engineering

a. Arrange and attend a pre-construction conference.
b. Review and approve shop drawings and submittals.
c. Review for approval and processing of pay requests.
d. Review for approval and processing of change orders.
e. Provide project inspection as necessary to ensure contractor compliance with project specifications.
f. Provide the City with a set of as-built drawings.

Scope of Services & Price Proposal

TASK 1 INITIAL ACTIVITIES $ 107,500 (Fixed Fee)

This task includes work involved with Phases I & II and:

- Field topographic and existing R/W surveying and preparation of project base mapping per attached Smart Services, Inc. scope and fee proposal.
- Subsurface geotechnical investigations and soil borings per attached Terracon scope and fee proposal.
- Environmental review and identification of environmental red flags per attached Smart Services Inc. scope and fee proposal.
- ADR's Engineer's site visit including base mapping field edit, review of geotechnical conditions, environmental conditions, utilities including OUPS coordination, etc.
- ADR's Engineers and Surveyor will collaborate and coordinate with subconsultants for design work and investigations then perform peer reviews of subconsultant work.
- Project management, administration and oversight of activities associated with this task.
- Reimbursable expenses including mileage, postage, supplies, printing, copies, delivery costs, etc.

CITY OF ZANESVILLE RESPONSIBILITIES:

- Ensure access to the property for survey, environmental and geotechnical investigations.

TASK 2 STUDY, PRELIMINARY DESIGN AND COST ESTIMATING $ 57,500 (Fixed Fee)

This task includes work involved with Phases I & II and:

- Preparing study exhibits, conceptual plans, and planning level cost estimates for up to two feasible improvement alternatives for rock cut slope and for the north side landslip.
- Preparation of a feasibility study report documenting the alternative feasibility analysis and recommendation of a preferred alternative for the rock cut slope and the north side landslip.
- Participating in a meeting or video conference to discuss the feasible improvement alternatives and/or feasibility study review comments to finalize selection of preferred alternatives.
- Preparation of preliminary engineering plans and an engineer's budget estimate of probable construction costs for the preferred alternative selected for further development for the rock cut slope and the north side landslip.
- Identification of known and potential utility impacts associated with the preliminary engineering plans.
- Participating in a meeting or video conference to discuss the preliminary engineering plans.
- Disposition of review comments.
- Developing scope of services for subsequent phases of project development including detailed design, development of constructions plans, etc.
- Project management, administration and oversight of activities associated with this task.
- Reimbursable expenses including postage, supplies, printing, copies, delivery costs, etc.

Scope of Services & Price Proposal

TASK 3 FUNDING APPLICATION ASSISTANCE $ 7,000 (Fixed Fee)

This task includes work involved with Phases I & II and:

- Coordination with City of Zanesville for identification of potential project funding sources.
- Preparing up to three (3) funding applications, one (1) each for up to three (3) funding agencies.
- Disposition of submitted funding application review comments.
- Project management, administration and oversight of activities associated with this task.
- Reimbursable expenses including postage, supplies, printing, copies, delivery costs, etc.

TASK 4 IF-AUTHORIZED ITEMS

TOPOGRAPHIC SURVEY OF SPOILS AREAS $ 3,150 (FIXED FEE)

This work includes:

- Services per attached Smart Services, Inc. scope and fee proposal for this task.
- ADR's peer review and coordination.
- ADR's incorporation of subconsultant work into project deliverables.
- Project management and oversight including project management and administrative activities associated with the task.
- Reimbursable expenses including vehicle mileage, postage, supplies, printing, copies, delivery costs, etc.

TASK 5 ADDITIONAL SERVICES, IF AUTHORIZED $ Time and Materials

- This task includes services authorized and performed beyond the items included in this proposal. The services will be performed based on ADR's current standard billing rates for labor.

Scope of Services & Price Proposal

See attached for ADR's Detailed Breakdown of Proposed Total Hours, Personnel Categories, Labor Rates, Subconsultant Fees and Estimate of Direct Costs.

Scope of Services		Fee
Fixed Fee Summary		
Task #1	Initial Activities	$ 107,500
Task #2	Study, Preliminary Design & Cost Estimating	$ 57,500
Task #3	Funding Application Assistance	$ 7,000
Task #4	If-Authorized Tasks	$ 3,150
Total Estimated Engineering Consulting Cost (Phases I & II)		**$ 175,150**
Task #5	Additional Services, If Authorized	$ T&M*

*T&M = Time and Materials based on ADR's current standard billing rates

Schedule

The identified tasks above can generally be completed per the following schedule subject to weather conditions permitting for field work. Substantial snow or excessively cold temperatures may delay field work.

		Duration	From Authorization
Task #1	Initial Activities	10 Weeks	10 Weeks
Task #2	Study, Preliminary Design & Cost Estimating	10 Weeks	20 Weeks
Task #3	Funding Application Assistance	2 Weeks	22 Weeks

Items not included in this Proposal

The following items are additional services that have been provided for projects similar to yours. These items are considered beyond the scope of this proposal:

- Public Involvement or notifications
- Other items or task not otherwise identified in this proposal document.

ADDITIONAL TERMS

- The Client shall sign the "Contract" as Authorization to Proceed (see attached).
- ADR's standard "Terms and Conditions" shall be considered a part of this proposal (see attached).
- Invoices will be sent every four (4) weeks based on work completed.

REIMBURSABLE EXPENSES

- ADR will invoice the Owner for the following items, in addition to the original contract amount.
  - Application fees, review fees, or any other fees associated with this project.
  - Reproduction costs and delivery charges.
  - All direct costs will be invoiced at our cost + 15%.

EXTRA WORK

- The following events are considered extra work:
  - Changes to the original scope of services.
  - Additional work items, beyond the scope of the original contract.

LIMITATIONS

- This proposal/contract will expire 120 calendar days from the date of this proposal, unless ADR & Associates, Ltd. Is provided authorization to proceed.
- The feasibility and success of this project remains the responsibility of the Owner.
- ADR shall perform engineering and surveying services work in accordance with this proposal.

Ordinance 2020-73
Attachment A

City of Zanesville

DETAILED BREAKDOWN OF PROPOSED TOTAL HOURS, PERSONNEL CATEGORIES, AND LABOR RATES

Project Name	Muskingum Avenume Improvements
CONSULTANT:	ADR & Associates, Ltd.
PROJECT DESCRIPTION:	Landslip Repair and Roadway Improvements, Phases 1 & 2

Proposal Date: 5/14/2020

Revised Date:

HOURLY BILLING RATES

Partner/ Principal or Sr. Const. Eng./Manager	$194.00
Eng, Surv, or PM III	$160.00
Eng, Surv, or PM II, or Const. Eng	$140.00
Eng, Surv, or PM I	$118.00
Tech III	$100.00
Clerical, Tech I, or Insp.	$74.00

Task #	Task Description	Partner/ Principal or Sr. Const. Eng./Manager	Eng, Surv, or PM III	Eng, Surv, or PM II, or Const. Eng.	Eng, Surv, or PM I	Tech III	Clerical, Tech I, or Insp.	Overall Total Hours	ADR Labor Fee	Subconsultant Fee	ADR Direct Costs	Total Fee
1	**Initial Activities**											
1.01	Field Survey & Base Mapping	1	2				1	4	$588.00	$18,450.00		$19,038.00
1.02	Engineer's Site Visits		3	3				6	$900.00		$30.00	$930.00
1.03	Geotechnical	2	4				1	7	$1,102.00	$79,950.00		$81,052.00
1.04	Environmental Review - Red Flags		1				1	2	$234.00	$5,000.00		$5,234.00
1.05	Project Management & Oversight	2	4				2	8	$1,176.00			$1,176.00
1.06	Reimbursable Expenses										$70.00	$70.00
	TASK 1 SUBTOTAL:	5	14	3	0	0	5	27	$4,000.00	$103,400.00	$100.00	$107,500.00
2	**Study, Preliminary Design and Cost Estimating**											
2.01	Preliminary Plans	1	40	40	80	80		241	$29,634.00			$29,634.00
2.02	Preliminary Quantities		8	16	24			48	$6,352.00			$6,352.00
2.03	Budgetary Cost Estimating		8	8				16	$2,400.00			$2,400.00
2.04	Costs & Impacts Comparisons	1	8	8	8			25	$3,538.00			$3,538.00
2.05	Alternatives Evaluation Report	2	40	8	16	8	1	75	$10,670.00			$10,670.00
2.06	Project Review Teleconferences	2	4					6	$1,028.00			$1,028.00
2.07	Project Management & Oversight	8	12				2	22	$3,620.00			$3,620.00
2.08	Reimbursable Expenses										$258.00	$258.00
	TASK 2 SUBTOTAL:	14	120	80	128	88	3	433	$57,242.00	$0.00	$258.00	$57,500.00
3	**Funding Application Assistance**											
3.01	Funding Opportunities	2	8		8		1	19	$2,686.00			$2,686.00
3.02	Application Preparation	2	8		8		1	19	$2,686.00			$2,686.00
3.03	Project Review Teleconferences	2	2					4	$708.00			$708.00
3.04	Project Management & Oversight	2	2				1	5	$782.00			$782.00
3.05	Reimbursable Expenses										$138.00	$138.00
	TASK 3 SUBTOTAL:	8	20	0	16	0	3	47	$6,862.00	$0.00	$138.00	$7,000.00
	TOTAL:	27	154	83	144	88	11	507	$ 68,104.00	$ 103,400.00	$ 496.00	$ 172,000.00

Ordinance 2020-73
Attachment A

City of Zanesville

DETAILED BREAKDOWN OF PROPOSED TOTAL HOURS, PERSONNEL CATEGORIES, AND LABOR RATES

Task #	Task Description	Partner/ Principal or Sr. Const. Eng./Manager	Eng, Surv, or PM III	Eng, Surv, or PM II, or Const. Eng.	Eng, Surv, or PM I	Tech III	Clerical, Tech I, or Insp.	Overall Total Hours	ADR Labor Fee	Subconsultant Fee	ADR Direct Costs	Total Fee
4	If-Authorized Tasks											
4.01	Topo Survey Spoils Areas		1			4	1	6	$634.00	$2,500.00	$16.00	$3,150.00
	TASK 4 SUBTOTAL:	0	1	0	0	4	1	6	$634.00	$2,500.00	$16.00	$3,150.00
	GRAND TOTAL:	27	155	83	144	92	12	513	$ 68,738.00	$ 105,900.00	$ 512.00	$ 175,150.00

Ordinance 2020-73
Attachment A

May 13, 2020

ADR & Associates, Ltd.
88 W. Church Street
Newark, Ohio 43055
Attn: Ronald Bonnette

Re: Environmental and Surveying Services
Muskingum Avenue
Zanesville, Ohio

Smart Services, Inc. appreciates the opportunity to submit this proposal to perform environmental and surveying services for the above-referenced site. This proposal describes our understanding of the project, outlines our approach, and presents a schedule and proposed fees for these services.

The limits for which the TOPOGRAPHIC SURVEY MAIN SITE scope and fee applies are based on the "Limits of Survey Muskingum Avenue" exhibit prepared by ADR & Associates, dated 5/7/2020, attached hereto. The limits for which the TOPOGRAPHIC SURVEY SPOILS AREAS scope and fee applies are based on the Fill Areas 1 and 2 on the west side of the park parking lot, as shown on the "Schematic Plan" exhibit prepared by Hull, dated 10/31/19, attached hereto. The limits for which the ENVIRONMENTAL REVEW SITE scope and fee applies are based on both of the documents referenced above.

SCOPE OF SERVICES – ENVIRONMENTAL REVIEW
Proposed Services
Smart Services, Inc. (Smart) will prepare an environmental review ("Red Flag" Survey) for the above referenced Project. The environmental review will generally follow ODOT's Construction and Materials Specifications Manual Sections 105.16 and 107.10. The environmental review will include an investigative site visit and secondary source literature reviews for cultural and historical resources; ecological resources, including threatened and endangered species; public lands; and hazardous waste areas. The review does not include an ASTM Environmental (ESA) Phase I, II or a Phase I cultural and historical survey. A written report summarizing the field survey information will be prepared.

SCOPE OF SERVICES – TOPOGRAPHIC SURVEY MAIN SITE

Proposed Services

We will perform a field survey of the subject area, to include:

- Establish project control, vertical and horizontal, for construction.
  - Ohio State Plane (South Zone) established by Static GPS Observations processed through OPUS
  - North American Vertical Datum of 1988 established by Static GPS Observations processed through OPUS
  - Minimum of one bench mark and one horizontal control point on each side of the slip near the proposed improvements
  - Minimum of one additional control monument on each side of the slip outside of the survey limits
  - Minimum of three control monuments in the park area
- Acquire cross-section data at 25' to 50' intervals (more frequently in horizontal and/or vertical curves). Includes intersection of Muskingum Avenue and Pine Street (all four quadrants) to Railroad tracks crossing Muskingum Avenue on the east side of the project.
  - Collect the following cross-section data by ground survey:
    - Uphill ditch Line
    - Grade break
    - Uphill Edge of Road
    - Crown of Pavement
    - Downhill Edge of Road
    - Grade break
    - As well as curbs and sidewalks where existing
  - Collect the following cross-section data at 50' intervals by terrestrial scanning or aerial LiDAR survey:
    - Uphill top of bank by park
    - Grade points along slope to ditch
    - Uphill top of bank by roadway
    - Grade points along slope to edge of river
  - Collect the following cross-section data at 50' intervals by bathymetric survey (150 feet upriver and 150 feet downriver from center of slip):
    - 5' from edge of river
    - 10' from edge of river
    - 15' from edge of river
    - 20' from edge of river
    - 25' from edge of river
    - 30' from edge of river
    - 35' from edge of river
- Locate roadway improvements (signs, fencing, walls, driveways, mailboxes, light poles, signals, pavement markings, railroad crossing, railroad signal)
- Locate historic spring and other significant seeps
- Locate "As Drilled" Test Boring locations (after initial survey)
- Locate visible utility facilities and markings within the survey limits
- Acquire inverts and pipe sizes when easily accessible from above ground access points

(no confined space entry)

- Locate private improvements (buildings, fencing, walks, landscaping)
- Locate trees (when not grouped with others) and tree lines (groups of trees) within the survey limits
- Recon and recover existing boundary monuments to re-establish R/W and deed property lines within the scope limits

We will perform office survey support, to include:

- Contact OUPS for utility maps and markings
- Perform online research for road records, railroad plans, deeds, and surveys
- Establish existing Road centerline of right-of-way and existing R/W limits based on simplified geometry of best fit existing pavement centerline if no records exist
- Analyze and calculate deed records to re-establish R/W and deed property lines within the scope limits (not boundary level survey)
- Base map preparation in AutoCad Civil3D with minimum 1 ft. contours utilizing ODOT codes and layers

SCOPE OF SERVICES – TOPOGRAPHIC SURVEY SPOILS AREAS

Proposed Services

We will perform a field survey of the subject area, to include:

- Utilize project control from Topographic Survey Main Site.
- Acquire aerial LiDAR topographic survey data to generate 1 ft. contours, and locate tree lines, building, and near edge of park drive/parking.

We will perform office survey support, to include:

- Contact OUPS for utility maps and markings.
- Base map preparation in AutoCad Civil3D with minimum 1 ft. contours utilizing ODOT codes and layers.

FEE

Smart Services is prepared to complete these services for the lump sum fees as shown below:

TOPOGRAPHIC SURVEY MAIN SITE	$18,450
TOPOGRAPHIC SURVEY SPOILS AREAS	$ 2,500
ENVIRONMENTAL REVIEW	$ 5,000

We appreciate the opportunity to be of service to you. If you have any questions about the outlined scope of work, please feel free to contact me.

Sincerely,
SMART SERVICES, INC.

Brian D. Smart, P.S.
Vice President

Ordinance 2020-73
Attachment A

May 14, 2020

Terracon

ADR & Associates, Inc
88 West Church Street
Newark, OH 43055

Attn: Mr. Ronald S. Bonnette, PE, PS
Senior Project Manager
P: (740) 345-1921
C: (740) 403-6438
E: rbonnette@adrinnovation.com

Re: Proposal for Geotechnical Engineering Services
City of Zanesville Muskingum Avenue Improvements
Phase I and Phase II - Preliminary Planning Phases
Zanesville, Ohio
Terracon Proposal No. PN4205106

Dear Mr. Bonnette:

Terracon Consultants, Inc. (Terracon) is pleased to submit this proposal to provide geotechnical engineering services for the Phase I and Phase II - Preliminary Planning Phases of the Muskingum Avenue Improvements Project located in Zanesville, Ohio.

This proposal includes our scope of services based on our site reconnaissance visit, the City of Zanesville Request for Project Qualifications (RFQ) document; our understanding of the requested scope of services based on our project scoping conference call with ADR and the City of Zanesville of May 4, 2020, and subsequent telephone conversations and emails with you following the conference call. The proposal outlines our proposed scope of geotechnical engineering services for "Phase I – Preliminary Phase" and "Phase II – Planning and Preliminary Phase" of the RFQ: and provides our estimated lump sum fees and anticipated schedule for the requested services.

1.0 PROJECT INFORMATION

1.1 Project Overview

The City of Zanesville is planning improvements necessary to reopen Muskingum Avenue to the traveling public between Pine Street and the railroad crossing approximately 1500 feet to the east. The project consists of performing geotechnical analysis, preparing civil engineering design alternatives with associated cost estimates, preparing construction plans and bidding documents, securing project funding, and providing construction engineering services. ADR & Associates, Ltd. (ADR) has been selected by the City of Zanesville as the prime design consultant for the

project with Terracon as a subconsultant to provide geotechnical engineering services for the project. Smart Services is the project surveyor.

ADR has requested that Terracon provide a proposal for "Phase I – Preliminary Phase" and "Phase II – Planning and Preliminary Phase" of the RFQ. Phase I consists of identifying required information needed, providing the City of Zanesville with a proposal and a tentative scope of services, and meeting with the City to discuss the proposal and finalize with council approval.

Phase II consists of the following:

- Perform engineering field surveying as required for plan development.
- Conduct geotechnical investigation and provide report to support engineering design.
- Coordinate with all utilities within the corridor for existing alignments.
- Provide at least two design alternatives with cost estimates to remediate rock cut slope.
- Provide at least two design alternatives with cost estimates to repair the north side slip.
- Meet with the City to discuss and finalize selected alternatives.

Three additional phases are described in the RFQ: "Phase III – Design and Funding Phase", "Phase IV – Bid Phase", and "Phase V – Construction Engineering". Our proposal is for geotechnical services for Phase I and Phase II only. A proposal for services for Phase III through V can be provided following selection of the final design alternative.

1.2 Background

Muskingum Avenue is prone to rock and tree falls due to the steep weathered rock cut slope situated along the south side of the roadway. Public safety is a concern for vehicle and pedestrian trafficking due to the lack of an adequate safety shoulder for debris catchment. On the north side of the roadway there is another steep slope downward to the Muskingum River that has slip prone areas. The roadway was initially closed in early 2017 due to the increasing frequency of rock and tree falls. Resulting concerns from the public regarding delay of essential public safety services and access to residences and businesses on either end of the corridor led the City to reopen the road in late 2017 by limiting travel to the north lane with timed traffic signals on either end of the roadway to allow for alternating traffic and with a portable concrete barrier wall in between the signals to protect from falling debris.

In February of 2019 a significant slip developed along the north side edge of the pavement and the combination of hazards to the public from above and below have left the roadway completely closed since that time.

This portion of Muskingum Avenue is an important thoroughfare within the City of Zanesville. The road is a local connector between two federal routes, US 40 and US 22/SR 60. It serves as an important transportation link from the southern part of the city to the downtown and handles traffic from both downtown bridges, the 6th Street Bridge and the famous Y Bridge.

1.3 Terracon Site Visit Summary

Terracon visited this site in December 2019 to observe the rock cut slopes and potential global stability issues of the roadway platform. Visual observations were made at the site to evaluate the soil and rock type, dimensions of land slippage, slope heights, and lengths to support our understanding of the project. The roadway was closed to traffic at the time of our site visit.

The composition of the exposed bedrock in the slope above the roadway appeared to be mostly highly weathered shale susceptible to continued degradation with less predominant beds of more resistant sandstone. The bedrock formation is most likely of the lower part of the Allegheny Formation between the Putnam Hill limestone and the Lower Kittanning clay. This formation is known to weather into residual soil comprised of highly-plastic clay. Differential weathering between the shale and sandstone appears to have caused under carving of the more resistant sandstone creating rock fall hazards of potentially boulder size fragments of sandstone.

Rockfall debris was noted within the ditch area and the residual soils had slipped exposing the shale face in several locations over nearly an 800 LF stretch of the roadway. With exposure, the shale will continue to weather and degrade worsening the current instability.

1.4 Available Geotechnical Information

Various information and historical documents were made available by the City of Zanesville and provided to ADR for reference in preparing the scope of services for the Phase I and Phase II portions of the Project. The majority of the data is related to previous survey, topography, utility locations and visual assessment reviews of the approximate 1500 lineal feet of the project related roadway alignment. Roadway construction/repair documents from the early 1950's would indicate that the current roadway cross section is likely constructed over the original brick pavement. Very limited subsurface exploration data was included in the existing information. A Geotechnical Study by DLZ in May of 2001 included a single test boring with an installed inclinometer near the north edge of pavement centered on the existing slip area. Based on this 35 feet deep boring, the DLZ Geotechnical Engineer recommended construction of a soldier pile and lagging wall approximately 150 lineal feet in length using W30X108 beams supported in 36 inch diameter drilled shafts to stabilize the north slope off the edge of pavement. No other geotechnical exploration data was noted within the provided documents.

2.0 SCOPE OF SERVICES

Terracon's scope of services for Phase I and II of the project includes geotechnical field exploration to collect subsurface and rock outcrop data, laboratory testing of soil and rock samples, geotechnical engineering analyses to support development of design alternatives,

geotechnical engineering report preparation and attendance at meetings with ADR and the City. Our proposed scope of services is presented in the following sections.

2.1 Field Exploration

The field exploration will include performing geotechnical test borings at the project site, performing geophysical testing to map top of bedrock, sounding of the river bottom and reviewing the river bank, and outcrop line logging of the south side rock slope.

2.1.1 Geotechnical Test Borings

Terracon will use a track-mounted rotary drill rig with hollow-stem augers to drill a total of 19 boreholes across the site. The following table summarizes the approximate locations of the borings, and estimated soil drilling/sampling and rock coring footage.

Site Feature	Number of Borings and Approximate Locations	Estimated Boring Depth and Drilling and Sampling Requirements	Estimated Drilling Footage (feet)
North Slip	4 borings located along the crest/edge of the existing roadway (Note 1.)	20 to 30 feet deep borings with 15 to 20 feet of soil overburden drilling and sampling and 10 feet (min.) rock core in each boring	120
Base of South Face of Rock Cut Slope	3 borings along the base of the South Rock Cut Slope at roadway level	15 feet deep borings with minimal to 5 feet of soil overburden drilling and sampling and 10 feet (min.) rock core in each boring	45
Crest of South Face of Rock Cut Slope in Park	3 borings along the crest of the cut slope	90 feet deep borings with 10 to 15 feet of soil overburden drilling and sampling and 75 feet +/- of rock coring in each boring	270
Existing Roadway	9 borings along the existing roadway for subgrade analysis follow guidelines of ODOT Geotechnical Bulletin 1 (GB-1) and to collect information about existing pavement sections	10 feet deep borings with augering through existing pavement section and 6 feet continuous soil sampling into subgrade: terminate boring if auger refusal is encountered prior to 10 feet depth; no rock coring planned	90
Total Borings:	**19**	**Total Est. Drilling Footage:**	**525**

1. Terracon will supplement these 4 borings with an existing boring performed by DLZ, Inc. in May 2001.

Exploration Layout and Elevations: The actual boring and exploration locations will be established in the field by Terracon based on review of site features. We will use handheld GPS equipment to locate borings and other exploration locations with an estimated horizontal accuracy of +/-20 feet. Field measurements from existing site features will be utilized. Upon completion of

the field exploration, we have assumed that the Project Surveyor will establish the "as-drilled" locations and elevations of the test borings; and other exploration locations, and provide that information to ADR and Terracon.

Subsurface Exploration Procedures: We will perform the soil borings with a track-mounted drill rig using continuous hollow-stem augers to advance the boreholes. The scope of our services is presented below.

- Standard penetration tests with split-barrel samplers will be conducted in the borings in accordance with ASTM D 1586.
- The depth of topsoil and/or other organic material; and pavement section materials, will be noted on the boring logs.
- Sampling and testing will be performed continuously to a depth of 6 feet in the Roadway borings. Sampling and testing will be typically performed at 2.5-foot or five-foot intervals in the soils to termination depths. The sampling intervals will be determined by the project geotechnical engineer.
- If split spoon sampling is not possible, the hole shall be drilled to the planned depth or until refusal. A description of the auger return material shall be described in the boring log.
- Thin-wall (Shelby) tube samples may be collected as determined by the project geotechnical engineer based on soil conditions encountered
- Rock coring will be performed using NX/NQ size core barrels.
- The soil and rock will be classified throughout the entire depth using ODOT's Soil Classification System.
- The ground water level shall be recorded at the time that the borings are taken. Extended water level readings are not planned; but can be provided for an additional fee.

Boring depth may need to be adjusted if poor-quality soil or deeper than estimated bedrock are encountered. We will communicate directly with you regarding any significant boring depth adjustments as needed.

Site Access and Boring Locations: Items to be provided by the client include the right of entry to conduct the exploration including appropriate property owner contacts from the City and an awareness and/or location of any subsurface utilities existing in the area. We will initiate the utility clearance process by calling Ohio Underground Protection Services (OUPS). If there are any known entities that own or maintain utilities at the property that are not One Call subscribers, Terracon will contact those firms/persons to arrange for locating of the associated utilities. Due to the potential for the presence of unknown subsurface utilities based on the historical time frame associated with the initial construction of the roadway corridor and the Putnam Hill Park property, Terracon will engage a Private Utility Locate Service to clear the staked locations prior to drilling. The fee for this service is included in the Compensation Table under Section 4.0 below.

Our fee is based on the site being accessible to a track-mounted drill rig.

The proposed drilling is planned during normal daytime business hours (i.e., 7:00 AM to 8:00 PM). Any changes to the anticipated daily working times indicated will require approval and agreement during discussion to establish the final schedule.

Property Disturbance: For safety purposes, each boring will be backfilled immediately after their completion with auger cuttings. We backfill borings after completion in accordance with local requirements. Our services do not include repair of the site beyond backfilling our boreholes. Excess auger cuttings and drilling fluids are dispersed in the general vicinity of the borehole or can be disposed of onsite at a location designated by the City. Because backfill material often settles below the surface after a period, we recommend the boreholes be checked periodically and backfilled, if necessary. We can provide this service, or grout the holes for additional fees, at your request. We have not budgeted to restore the site beyond the actions stated above.

Our scope of services does not include services associated with site clearing, wet ground conditions, tree or shrub clearing, or repair of damage to existing landscape. If such conditions are present, we should be notified so we can adjust our testing locations or fees. Plywood sheeting, or other appropriate matting, will be used to minimize ground surface disturbance for the three test borings proposed to be performed within the Putnam Hill Park area.

In addition, Terracon retains the right to stop work without penalty at any time Terracon believes it is in the best interests of our employees or subcontractors to do so to reduce the risk of exposure to the coronavirus. Client agrees it will respond quickly to all requests for information made by Terracon related to our pre-task planning and risk assessment processes. Client acknowledges its responsibility for notifying Terracon of any known circumstances that present a risk of exposure to the coronavirus or individuals who have tested positive for COVID-19 or are self-quarantining due to exhibiting symptoms associated with the coronavirus.

2.1.2 Sounding of River Bottom/Bank Scour Review

We understand that the Project Surveyor will be performing a bathymetric survey of the river bottom along the river bank in and along the north slip. This survey will be performed using a small watercraft or boat. We propose for a Terracon geologist to accompany the survey crew during the survey to perform soundings of the sediment depth of river bottom within the study area. These soundings will be performed by our geologist using rods or other hand held sampling tools. We request that the survey crew provide our geologist with the coordinates of the sounding locations during the survey operations. The geologist will also visually review and photo document the river bank for indications of instability and scour.

2.1.3 Geophysical Survey

Terracon proposes to perform 4 to 5 geophysical survey lines in an upslope-downslope orientation in line with the borings of the vicinity of the North Slip. The purpose of the geophysical survey is

to map the top of weather bedrock in areas where drill rig access is not feasible. Our field geologists will perform the survey.

Electrical resistivity imaging (ERI) will be used to map the subsurface resistivity at the project site. Terracon proposes to perform ERI surveys using an Advanced Geosciences Inc. (AGI) SuperSting R8 control unit and survey lines comprised of 56 electrodes. Changes in the earth resistivity can indicate changes in lithology, and saturation After field collection, the data will be returned to the office for processing, interpretation, and reporting. The resistivity data will be processed using EarthImager 2D (engineered by AGI), an inversion and modeling software package. The processing will be informed by the findings in the associated test borings.

2.1.4 Outcrop Line Logging

Terracon proposes to perform line logging along 5 vertical lines of the south face of the cut rock slope above the roadway. The locations of the lines will be established by Terracon based on conditions observed during a site visit for boring layout. The logging will be performed by our geologist. We plan to use a man-lift operated from the closed roadway to provide access for review and measurements. The rock outcrop logs will be used to supplement the test boring logs developed for the project.

2.2 Laboratory Testing

Upon completion of the drilling and sampling operations, the recovered soil samples will be returned to our Columbus Soil Mechanics Laboratory for visual classification and selection of representative samples for laboratory testing. The laboratory testing performed will provide information for developing the geotechnical soil and rock parameters.

The laboratory-testing program will include the following:

- Natural soil moisture content determination
- Atterberg limits determination
- Gradation testing
- Unconfined compressive strength testing of soil and rock
- Slake durability testing of rock

The boring logs developed during drilling operations will be reclassified using the laboratory testing data by the project engineer following the completion of laboratory testing.

2.3 Engineering Analysis and Report

The data developed from the site reconnaissance, surveying (provided by Smart Services), field exploration, and laboratory testing, along with other project specific information developed in coordination with ADR & Associates, Ltd. will be utilized for engineering analysis and preparation of a Geotechnical Engineering Report. We anticipate that the report will present and evaluate two alternatives for repair of the North Slip and two alternatives for stabilization of South Cut Rock Slope. Please note that this report will be a baseline geotechnical data report for the project. Additional detailed geotechnical engineering analyses would be provided under a supplemental scope of work for the project following selection of the preferred design alternatives by the City.

We anticipate that the Geotechnical Engineering Report will include the following:

- Boring logs with soil stratification based on visual/laboratory soil and rock classification;
- Outcrop logs based on visual soil and rock classification;
- Summary of river soundings/scour review;
- Summary of geophysical testing data and analysis;
- Summarized laboratory data;
- Groundwater levels observed during and after completion of drilling;
- Exploration location plan(s);
- Description of site conditions;
- Subsurface exploration procedures;
- Summary of encountered/observed soil/rock and groundwater conditions;
- Summary of geotechnical engineering evaluation analyses;
- Geotechnical evaluation of two design alternatives for repair of the North Slip;
- Geotechnical evaluation of two design alternatives for stabilization of the South Slope;
- Preliminary recommendations for slope repair stabilization / mitigation options:
- Recommendations for additional geotechnical data collection for final design.

2.4 Meetings

We have budgeted for two design review meetings with the City of Zanesville. We have assumed that our project manager and project geotechnical engineer will attend the meetings in Zanesville as scheduled and coordinated by ADR.

3.0 SCHEDULE

We can generally begin the field exploration program within 7 to 10 business days after receipt of authorization to proceed and if site and weather conditions permit. Utility notification will be accomplished after receipt of signed authorization and prior to drilling. Field operations should be completed during a 3 week period. We estimate the final geotechnical report can be completed and issued within about 4 to 5 weeks after the field exploration is completed.

4.0 COMPENSATION

We propose to perform the geotechnical services for estimated Lump Sum fees as detailed in the following table.

Task	Lump Sum Fee
Item 2.1.1: Field Exploration – Geotechnical Test Borings including Private Utility Locate Service at each Test Boring location	$25,650
Item 2.1.2: Field Exploration – Sounding of River Bottom/Bank Scour Review	$1,250
Item 2.1.3: Field Exploration – Geophysical Survey	$6,000
Item 2.1.4: Field Exploration – Outcrop Line Logging	$4,900
Item 2.2: Laboratory Testing	$9,500
Item 2.3: Engineering Analysis and Report	$29,050
Item 2.4: Meetings	$3,600
Total Lump Sum Fee:	**$79,950**

5.0 AUTHORIZATION

We understand that these services will be provided under a mutually agreeable negotiated contract between ADR and Terracon after review of the requirements of the Prime Agreement or other Contract document between ADR and the City. If you have any questions, please contact us. Thank you for the opportunity to submit this proposal.

Sincerely,
Terracon Consultants, Inc.

John C. Enderle
Senior Project Manager/Senior Associate

Kevin M. Ernst, P.E.
Senior Geotechnical Engineer/Principal

Ordinance 2020-73
Attachment A

ADR & Associates, Ltd.
88 West Church St.
Newark, Ohio 43055
740-345-1921
Fax 740-345-4994

Clientcentric Consulting
Design . Engineering . Innovation

CONTRACT

CLIENT:

Charles M. Saunders, PE, City Engineer
Name

Zanesville, Dept. of Public Service
Company

401 Market Street
Address

Zanesville, OH 43701
City, State, Zip

740-617-4910
Phone No. Fax No.

BILLING INFORMATION:

Same
Name

Company

Address

City, State, Zip

Phone No. Fax No.

TERMS & CONDITIONS: See Attached Exhibit A
Payment due upon receipt of invoices.

ADDITIONAL SERVICES INCLUDING, BUT NOT LIMITED TO, OUTSIDE CONSULTANTS, DELIVERY EXPENSES, REPRODUCTION, AND ANY REQUIRED OUT-OF-POCKET EXPENSES NOT OTHERWISE PROVIDED FOR PER ADR's AGREEMENT WILL BE PAYABLE AT OUR COST PLUS 15%.

PROJ. NAME: Muskingum Ave. (Dug Rd)
(description to be printed on invoice)
Improvements, Phases I & II

SCOPE SUMMARY: Perform study,
(services to be provided)
surveying, geotech, engineering design and
prepare preliminarhy construction plans

LOCATION: Muskingum Avenue
(location or description of project site)
City of Zanesville

DATE: May 14, 2020

PROPOSAL
P.O., or BID #: Proposal Dated 5/14/2020
(eg, Proposal Dated 6/30/01, PO # 02536)

BILLING TYPE: Per Proposal
(eg, Time & Material, Fixed Fee)

BILLING RATE: Per Proposal
(eg, Current Hourly Rates, Per Proposal)

BILLING AMT: $175,150
(eg, $##,###, Est. at $##,###)

By signing this Agreement client agrees to Pricing, Schedule, Scope of Services and Terms and Conditions as referenced in "Exhibit A" attached hereto.

ADR Representative *Title* *Client Signature* *Date*

Office Use Only:
Clone ADR Job #: _____ Project Mgr. _____
Cross Reference Job #: _____ Acc't Mgr. _____
(new job # - old job#)

ADR PROJ NO.

EXHIBIT "A"
TERMS AND CONDITIONS
ADR & Associates, Ltd

ARTICLE 1 - CONSULTANT SERVICES: ADR will:

1.1 Perform for Client in a professional manner, using that degree of care and skill ordinarily exercised by and consistent with the standards of the profession.

1.2 Provide only those Services requested by Client and as detailed in the Scope of Services.

1.3 Perform services on an agreed upon schedule subject to the timely receipt of information and approvals beyond ADR's control.

1.4 Treat only those documents marked confidential as confidential; otherwise, documents provided by Client to ADR can be exchanged with other parties if it is necessary to complete ADR's work.

ARTICLE 2 - CLIENTS' RESPONSIBILITIES: Client or its authorized representative will:

2.1 Provide ADR full information regarding the proposed project, including location, zoning, previous submittals, borings, probings and subsurface explorations, hydrographic surveys, laboratory tests and inspections of samples, and other information required for the proper performance of ADR.

2.2 Client agrees to indemnify and hold harmless ADR and ADR's independent associates from all claims, damages, losses and expenses, including attorneys' fees, arising out of, or resulting from, delays for which Client or third party is responsible.

2.3 Provide for ADR's right to enter the Project Site from time to time in order to fulfill the scope of services indicated hereunder.

2.4 Rely only on final hardcopy materials that bear ADR's original signature and seal. Documents that are stored and/or transmitted electronically may be inadvertently altered. Client acknowledges ADR's reports, plans, specifications, field data, field notes, and estimates, whether hardcopy or electronic, are instruments of professional service, not products. These documents are and shall remain the sole and exclusive property of ADR. Client agrees to indemnify and hold harmless ADR and ADR's independent associates from all claims, damages, losses and expenses, including attorneys' fees, arising out of, or resulting from, any reuse of these materials without written authorization of ADR. Said materials shall not be used by Client, or transferred to another party, for use in other projects, additions to the current project, or any other purpose for which the material was not strictly intended by ADR without ADR's express written permission.

2.5 Provide ADR with all approvals and permits from all governmental authorities having jurisdiction over the Project.

ARTICLE 3 - GENERAL CONDITIONS:

3.1 ADR shall not be responsible for the acts or omissions of any other party or parties involved in the design of the Project or the failure of any contractor or subcontractor to construct any item on the Project in accordance with recommendations, whether written or oral, issued by ADR.

3.2 Unless expressly provided in the Contract Documents, and then only to the extent expressly defined, ADR shall not have control or charge of, specify or be responsible for bidding and/or construction procedures, manage or supervise bidding and/or construction, or implement or be responsible for health and safety procedures, precautions or programs. ADR's testing or observations of portions of the work of other parties on the Project shall not relieve such other parties from their responsibilities for performing their work in accordance with applicable standards, plans, specifications and safety requirements.

3.3 This Agreement shall not create any rights or benefits to parties other than Client and ADR.

3.4 Services performed by ADR under this Agreement will be conducted in a manner consistent with that level of care and skill ordinarily exercised by members of the profession currently practicing in the same locality under similar conditions. **NO OTHER REPRESENTATIONS, EXPRESS OR IMPLIED, AND NO WARRANTY OR GUARANTEE IS INCLUDED OR INTENDED IN THIS AGREEMENT, OR IN ANY REPORT, OPINION, DOCUMENT OR OTHERWISE.**

EXHIBIT "A"
TERMS AND CONDITIONS
ADR & Associates, Ltd

3.5 Client recognizes that local zoning laws, planning regulations, environmental rules and wetland regulations are subject to interpretation by the various boards and agencies charged with ensuring compliance and that ADR makes no guarantees, express or implied as to the acceptability of Clients proposed project.

3.6 Client recognizes that environmental, geologic and geotechnical conditions can vary from those encountered at the times and locations where data are obtained by ADR, and that the limitation on available data results in some level of uncertainty with respect to the interpretation of these conditions, despite the use of due professional care.

3.7 Unless provided in the Proposal that hazardous or chemical contamination is present or potentially present at the Project site, a standard of practice consistent with that commonly used on uncontaminated sites shall be implemented. Client recognizes, accepts and assumes the risks of spreading contamination inherent with excavating trenches or drilling borings when said standard of practice is applied and Client shall indemnify and hold harmless ADR and ADR's independent associates from all claims, damages, losses and expenses, including attorneys' fees, arising out of or resulting therefrom.

3.8 Client recognizes that the use of surveying and exploration equipment may unavoidably affect, alter or damage existing vegetation and terrain at the site. ADR will take reasonable precautions to limit damage; however, Client recognizes that such damage is inherent in ADR's work and will hold ADR harmless for any such reasonable affect, alteration or damage. ADR will exercise due and reasonable care in locating subterranean structures in the vicinity where proposed subsurface explorations are to be made. This will include contact with appropriate public utilities, and review of plans and information provided by Client and/or Owner of the Project Site relating to the location of subterranean structures. Provided ADR has proceeded with due and reasonable care, ADR can not be liable for damages or injury arising from damage to or interference with subterranean structures, including, without limitation, pipes, tanks, telephone cables, etc., which are not called to ADR's attention and /or are not correctly shown on the plans furnished by client or others in connection with work performed under this Agreement.

3.9 If any claim is brought against ADR by any third party relating to services under this Agreement, unless it is proven that ADR was guilty of negligence or wrongful misconduct in connection with its services, Client shall indemnify and hold harmless ADR for all claims, liabilities, loss, legal fees, consulting fees, and other costs of defense reasonably incurred by ADR.

3.10 This agreement is not assignable by either client or ADR without the written consent of the other party.

ARTICLE 4 - PAYMENT TERMS:

4.1 Client will pay ADR for Services and expenses in accordance with the attached **Fee Schedule or Fixed Fee Price Schedule**. ADR will submit progress invoices to Client on a **four- (4) week billing cycle** and final invoice upon completion of its Services. Each invoice, upon presentation, is due and payable by Client or its authorized representative. Invoices are **past due after 30 days** and are subject to a finance charge of one and one-half percent per month on the outstanding balance. Payment thereafter shall first be applied to accrued interest and then to the unpaid principal. **All work will be suspended on any Project which has a past due invoice** until such time as payment is current. Clients with a history of past due invoices will be required to pay in advance. ADR has the right to institute payment collection activities if ADR's invoice is not paid within thirty (30) days. Client shall pay attorney's fees and others costs incurred in collecting past due amounts.

4.2 ADR shall be paid in full for all Services under this Agreement, including any overruns of Client's contract or any unforeseen need for ADR's services exceeding original contract requirements. ADR will make every reasonable attempt to identify and notify Client of unforeseen needs. Client shall make payment for such Services irrespective of any pending approvals or financing.

4.3 Client agrees that the periodic billings from ADR to Client are correct, conclusive, and binding on Client unless Client within twenty (20) days from the date of receipt of such billing, notifies ADR in writing of alleged inaccuracies, discrepancies, or errors in the billing.

4.4 Client's obligation to pay for the Services contracted is in no way dependent upon Client's ability to obtain financing, approval of governmental or regulatory agencies, or upon the Client's successful completion of the Project.

EXHIBIT "A"
TERMS AND CONDITIONS
ADR & Associates, Ltd

ARTICLE 5 - TERMINATION:

5.1 Either party upon thirty - (30) days written notice in the event of the other's substantial failure to perform in accordance with the terms hereunder may terminate this Agreement. Termination will not be effective if the substantial failure has been remedied before expiration of the period specified in the notice.

5.2 In the event of termination or suspension of the work for more than three (3) months, ADR may complete and provide Client all reports, documents or plans and work completed prior to termination or suspension as are necessary to complete its files. ADR shall be reimbursed for all Services performed as well as reasonable expenses associated with the termination.

ARTICLE 6 - MISCELLANEOUS TERMS:

6.1 The laws of the State of Ohio shall govern this Agreement.

6.2 This Agreement, including these Terms and Conditions, and the Attachments, including Scope of Services and Fee Schedule or Fixed Fee Payment Schedule, which are incorporated herein by reference, represents the entire Agreement between Client and ADR, and supercedes all prior negotiations, representations or agreements, written or oral. This Agreement may be amended only by written instrument signed by Client and ADR.

6.3 Any provision of this Agreement later held to violate a law or regulation shall be deemed void, and all remaining provisions shall continue in force.

6.4 In recognition of the relative risks and benefits of the Project to both the Client and ADR, the risks have been allocated such that the Client agrees, to the fullest extent permitted by law, to limit the liability of ADR and his or her sub-consultants to the Client and to all construction contractors and subcontractors on the project for any and all claims, losses, costs, damages of any nature whatsoever, or claims and expenses from any cause or causes, so that the total aggregate liability of ADR and his/her sub-consultants to all those named shall not exceed ADR's total fee or $25,000, whichever is **less**, for services rendered on this Project. Such claims and causes include, but are not limited to, negligence, professional errors or omissions, strict liability, breach of contract or warranty.

6.5 Neither the Client nor any of the Client's contractors or subcontractors will make any claim for professional negligence, either directly or by way of a cross complaint against ADR unless the Client has first provided ADR with a written certification executed by an independent design professional currently practicing in the same discipline as ADR and licensed in the state where the project is located. This certification will: a) Identify the name and license of the certifier; b) Specify each and every act or omission that the certifier contends is a violation of the standard of care expected of a design professional performing services under similar circumstances; and c) State in detail the basis for the certifier's opinion that such acts or omissions do not conform to the standard of care. This certificate must be provided to ADR not less than thirty (30) calendar days prior to the presentation of any claim or the institution of any arbitration, mediation, or judicial proceeding. Failure to provide such written certification will be considered a waiver by Client of all such claims against ADR. This Certificate of Merit clause will take precedence over any existing state law in force at the time of the claim or demand for arbitration.

6.6 Notwithstanding any other provision of the Agreement, neither party shall be liable to the other for any consequential damages incurred due to the fault of the other party, regardless of the nature of this fault, or whether it was committed by the Client or ADR, their employees, agents, sub-consultants, or subcontractors. Consequential damages include, but are not limited to, loss of use and loss of profit.

6.7 It is intended by the parties to this Agreement that ADR's services in connection with the Project shall not subject ADR's individual employees, officers, or directors to any legal exposure due to the risks associated with this Project. Therefore, notwithstanding anything to the contrary contained herein, the Client agrees that as the Client's sole and exclusive remedy, any claim, demand or suit shall be directed and/or asserted only against ADR, a limited liability corporation, and not against any of ADR's employees, officers or directors.

6.8 In the event the parties to this agreement are unable to reach a settlement of any dispute arising out of the services under this Agreement, except as provided for in 4.1 of this Agreement, then such dispute shall be settled first by mediation, said mediator

EXHIBIT "A"
TERMS AND CONDITIONS
ADR & Associates, Ltd

being mutually agreed upon by the parties. In the event the dispute is not resolved by mediation, the parties shall then proceed to binding arbitration by an arbitrator to be mutually agreed upon by the parties in accordance with the construction industry arbitration rules of the American Arbitration Association. If the parties cannot agree upon a single arbitrator, then the arbitrator(s) shall be selected in accordance with the above-referenced rules.

6.9 Only changes to ADR plans and specifications that are done in hardcopy and signed by ADR & Associates, Ltd. shall constitute modification to design documents and specifications.

Public Service Committee
Andrew Roberts, Chair

ORDINANCE NO. 2020 - 74
INTRODUCED BY COUNCIL

AN ORDINANCE AUTHORIZING THE WASTEWATER DIVISION TO EXTEND SANITARY SEWER SERVICES OUTSIDE OF THE CORPORATION LIMITS, AND DECLARING AN EMERGENCY.

WHEREAS, the City of Zanesville received a letter from the Zanesville-Muskingum County Health Department stating that nuisance conditions exist at the properties of 543 and 533 Cornell Street which pose a significant public health risk and needs addressed as soon as possible; and

WHEREAS, the properties cited are beyond the current corporation limits, but are within 300 feet of an existing sanitary sewer system, and per Ohio Administrative Code Chapter 3701-29-06, these properties must be connected to the sanitary sewer system; and

WHEREAS, both the Zanesville-Muskingum County Health Department and the Muskingum County Wastewater Departments have coordinated this request for services at Cornell Street.

NOW, THEREFORE, BE IT ORDAINED by the Council of the City of Zanesville, State of Ohio, that:

SECTION ONE: The Wastewater Division is hereby authorized to expend funds for the installation of sanitary sewer systems and services at 543 and 533 Cornell Street.

SECTION TWO: For the reasons stated above, this Ordinance is declared to be an emergency measure. Provided it receives the affirmative vote of six (6) or more members of City Council, this Ordinance shall take effect and be in force immediately upon its passage and approval of the Mayor. Otherwise, it shall take effect and be in force from and after the earliest period allowed by law.

PASSED: _____, 2020

ATTEST:

SUSAN CULBERTSON,
Clerk of Council

DANIEL M. VINCENT,
President of Council

APPROVED: _____, 2020

DONALD MASON,
Mayor

THIS LEGISLATION APPROVED AS TO FORM

LAW DIRECTOR'S OFFICE

Public Health
Prevent. Promote. Protect.
Zanesville-Muskingum County

Our Mission

Prevent. Promote. Protect. Public Health is our Passion!

April 22, 2020

Scott Brown, Wastewater Superintendent
1730 Moxahala Avenue
Zanesville, Ohio 43701

Re: Cornell Street Sewer Expansion

To whom it may concern;

This letter is to support the City of Zanesville's efforts to expand access to the sanitary sewer system for the properties of Cornell Street. Due to nuisance conditions present at both 543 and 533 Cornell Street the Zanesville-Muskingum County Health Department believes that this represents a significant public health risk which needs to be addressed as soon as possible.

It has come to the attention of the Health Department that sanitary sewer is accessible within 300 feet of the properties of Cornell Street. It has been determined that the City of Zanesville Wastewater Treatment Plant can withstand the additional flow volumes. However, these properties are outside of the city limits. In coordination with both the City and County Wastewater Departments, connection for these properties can become available. Enforcement action will be taken by the Zanesville-Muskingum County Health Department based on the applicable rules found in Chapter 3701-29-06 of the Ohio Administrative Code:

> *"(I) A STS shall not be sited, permitted, or installed where a sanitary sewerage system is accessible, unless otherwise excepted by law. Whenever a sanitary sewerage system becomes accessible to a dwelling or structure served by a STS, the dwelling and/or structures shall be connected to the sanitary sewerage system and the STS abandoned in accordance with rule 3701-29-21 of the Administrative Code."*

Sincerely,

Adam Dickerson RS
Environmental Health Director

Health Department
205 N. 7th Street
Zanesville, OH 43701

Ph: 740-454-9741
Fax: 740-455-6726
www.zmchd.org

Board of Health
Jennifer Agin, CPA, CGMA, MT
James Brown, JD
Paul Nestor
Abby Nguyen, RN, BSN, MBA, DBA
James Shepherd, MEd, CET
Linda Swan, MD

Attachment to Ordinance No. 2020-74

RES 20-0366

The following action was taken by the Board of Muskingum County Commissioners at its regular meeting today, April 23, 2020:

A RESOLUTION AUTHORIZING THE CITY OF ZANESVILLE TO PROVIDE SANITARY SEWER SERVICES TO CERTAIN REAL PROPERTIES LOCATED OUTSIDE THE CITY OF ZANESVILLE CORPORATION LIMITS

It was moved by Commissioner Crooks, seconded by Commissioner Porter, that this Board of County Commissioners, Muskingum County, Ohio, adopt the following resolution:

WHEREAS, the County, pursuant to the authority granted in Chapter 6117 of the Revised Code of the State of Ohio, operates a county sanitary sewer system; and

WHEREAS, the City, pursuant to the authority granted in Chapter 717 of the Revised Code of the State of Ohio, operates a municipal sanitary sewer system; and

WHEREAS, the county sanitary sewer system does not have the capability to provide service to certain areas of the county located outside the City of Zanesville Corporation limits; and

WHEREAS, the City of Zanesville has expressed interest in providing sanitary sewer service to certain properties located within Springfield Township, Muskingum County, Ohio; said properties being currently without either county or city sanitary sewer services; and

WHEREAS, the Zanesville-Muskingum County Board of Health has recommended that the following properties located within Springfield Township connect to either the county sanitary sewer system or the city sanitary sewer system.

NOW, THEREFORE, BE IT RESOLVED, that this Board of County Commissioners, Muskingum County, Ohio, does hereby authorize the City of Zanesville, Ohio to allow the following real properties located within Springfield Township to connect to the city sanitary sewer system:

1. Trish Hayhurst, 533 Cornell Street, Parcel No. 62-28-01-09-000.
2. Randy R. Kelso, 540 Cornell Street, Parcel No. 62-28-01-06-000.
3. Zanesville Terrace Properties Ltd., 2040 Ridge Road, Parcel No. 62-28-01-07-000.

Roll Call: Cameron, aye; Porter, aye; Crooks, aye. Motion Carried

---

CC: City of Zanesville Sewer Department
Zanesville-Muskingum County Health Department
Muskingum County Sewer Department

Copied on: 04.23.2020
Copied by: [illegible]

Adopted April 23, 2020:

Susan Beede
Commissioner's Clerk or Deputy Clerk

Community Development Committee
Mark Baker, Chair

ORDINANCE NO. 2020-75
INTRODUCED BY COUNCIL

AN ORDINANCE REPEALING ORDINANCE NO. 18-92, CREATION OF A DOWNTOWN REDEVELOPMENT DISTRICT

WHEREAS, The City of Zanesville ("the City") approved Ordinance No. 18-92 using the authority granted in Ohio Revised Code Sections 5709.45 through 5709.47 to create a Downtown Redevelopment District (DRD), the "Zane-Zenith DRD," and to declare to be a public purpose any infrastructure improvements made that are necessary for the development of such a DRD, thereby exempting seventy percent (70%) of improvements to such parcels from real property taxation for established time periods; and

WHEREAS, the historic building of the Zane-Zenith DRD is the Zane-Zenith building, a locally designated historic property established by Ordinance 17-117, which is located at 11 North 4th Street, Zanesville, Ohio, Parcel Number 81-64-03-18-000; and

WHEREAS, the City filed necessary documentation with the Muskingum County Auditor's for the Zane-Zenith DRD to be certified to and by the Ohio Tax Commissioner's Office; and

WHEREAS, the DRD is still pending certification from the Ohio Tax Commissioner's Office; and

WHERAS, the City and historic building owner have determined the benefits of the DRD will not greatly enhance downtown redevelopment efforts; and

WHEREAS, the historic building owner has requested the pending DRD be withdrawn from consideration for certification.

NOW THEREFORE, BE IT ORDAINED by the Council of the City of Zanesville, State of Ohio, that:

SECTION 1: Ordinance No. 18-92 be repealed in its entirety.

SECTION 2: The Community Development Director is authorized and directed to provide a certified copy of this ordinance to the Muskingum County Auditor's Office and the Ohio Tax Commissioner's Office to demonstrate the City's desire that the request for certification be withdrawn.

SECTION 3: This Ordinance shall take effect and be in force from and after the earliest period allowed by law.

PASSED: _____, 2020

ATTEST: _____
SUSAN CULBERTSON
CLERK OF COUNCIL

_____
DANIEL M. VINCENT
PRESIDENT OF COUNCIL

APPROVED: _____, 2020

_____
Donald L. Mason,
Mayor

THIS LEGISLATION APPROVED AS TO FORM

_____
LAW DIRECTOR'S OFFICE

Community Development Committee
Mark Baker, Chair

ORDINANCE NO. 2020-76
INTRODUCED BY COUNCIL

AN ORDINANCE AUTHORIZING THE PROPER CITY OFFICIAL TO ENTER INTO AN AGREEMENT TERMINATING AN AMENDED HISTORIC PROPERTY INVESTMENT AGREEMENT IN CONNECTION WITH THE ZANE-ZENITH DOWNTOWN REDEVELOPMENT DISTRICT

WHEREAS, Zanesville City Council previously authorized Ordinance 17-117, which Ordinance certified the property located at 11 North 4th Street, Zanesville, Parcel Number 81-64-03-18-000, as a locally designated historic property (the "Historic Property" or "Zane-Zenith Building"); and

WHEREAS, Zanesville City Council previously authorized Ordinance 18-92 that engaged the authority granted to the City of Zanesville ("the City") pursuant to Ohio Revised Code ("ORC") Sections 5709.45 through 5709.47 to establish a Downtown Redevelopment District (the "Zane-Zenith DRD") in an area located in Downtown Zanesville and encompassing a 9.65 acre area enclosed by a continuous boundary in which a historic building will be rehabilitated; and

WHEREAS, the City filed necessary documentation with the Muskingum County Auditor's for the Zane-Zenith DRD to be certified to and by the Ohio Tax Commissioner's Office; and

WHEREAS, the DRD is still pending certification from the Ohio Tax Commissioner's Office; and

WHEREAS, Ordinance 18-93, previously approved by the Zanesville City Council, authorized the proper city official to enter in to a Historic Property Investment Agreement with the Zane-Zenith Company for rehabilitation of the Historic Property; and

WHEREAS, Zanesville City Council previously authorized Ordinance No. 2020-13 authorizing the proper city official to enter into an amended Historic Property Investment Agreement with the Zane-Zenith Company for rehabilitation of the Historic Property; and

WHEREAS, the City and historic building owner have determined the benefits of the DRD will not greatly enhance downtown redevelopment efforts; and

WHEREAS, the historic building owner has requested the pending DRD be withdrawn from consideration for certification; and

NOW THEREFORE, BE IT ORDAINED by the Council of the City of Zanesville, State of Ohio, that:

SECTION 1: The Proper City Official of the City of Zanesville is hereby authorized to enter into An Agreement with the Zane-Zenith Company to terminate the amended Historic Property Investment Agreement.

SECTION 2: A certified copy of this ordinance will be provided to the Muskingum County Auditor's Office and Ohio Tax Commissioner's Office.

SECTION 3: This Ordinance shall take effect and be in force from and after the earliest period allowed by law.

PASSED: _____, 2020

ATTEST: _____
SUSAN CULBERTSON
CLERK OF COUNCIL

_____
DANIEL M. VINCENT
PRESIDENT OF COUNCIL

Ordinance No. 2020-76

APPROVED:_____, 2020

THIS LEGISLATION APPROVED AS TO FORM

_____

Donald L. Mason,
Mayor

_____

LAW DIRECTOR'S OFFICE

CERTIFICATE OF RECORDING OFFICER

I, the undersigned, hereby certify, that the foregoing is a true and correct copy of the resolution adopted by the Council of the City of Zanesville at the Council Meeting held on the ____ day in the month of _____, 2020, and that I am a duly authorized to execute this certificate.

_____

Signature
Sue Culbertson, Clerk of Council

Public Service Committee
Andrew Roberts, Chair

ORDINANCE NO. 2020 – 65A
INTRODUCED BY COUNCIL

AN ORDINANCE AUTHORIZING THE PROPER CITY OFFICIAL TO PURCHASE A NEW 2020 FYDA FREIGHTLINER WESTERN STAR 4700SB DUMP TRUCK FROM FYDA FREIGHTLINER FOR THE STREET DIVISION THROUGH THE OHIO DEPARTMENT OF TRANSPORTATION COOPERATIVE PURCHASING PROGRAM.

WHEREAS, the City staff has examined the current condition of the Street Division's heavy equipment and has determined that an existing dump truck with snow plow has exceeded its useful life expectancy and must be replaced; and

WHEREAS, Capital monies were appropriated for equipment purchases within the FY 2020 City Budget.

NOW, THEREFORE, BE IT ORDAINED by the Council of the City of Zanesville, State of Ohio, that:

SECTION 1: The proper City official is hereby authorized to purchase or finance a new 2020 Fyda Freightliner Western Star 4700SB dump truck with snow plow from Fyda Freightliner for the Street Division through the Ohio Department of Transportation Cooperative Purchasing Program, Contract #023-20.

SECTION 2: The cost for this new dump truck is estimated to be $147,217.00, and shall be paid from line item number 202-6541-54448.

SECTION 3: This Ordinance shall take effect upon the approval of the Mayor and from and after the earliest period allowed by law.

PASSED: _____, 2020

ATTEST:

SUSAN CULBERTSON,
Clerk of Council

DANIEL M. VINCENT,
President of Council

APPROVED: _____, 2020

DONALD MASON,
Mayor

THIS LEGISLATION APPROVED AS TO FORM

LAW DIRECTOR'S OFFICE

Prepared for:
Bill Rosser
OH City of Zanesville
1084 Central Ave
Zanesville, OH 43701
Phone: 740-819-8937

Prepared by:
Dustin Schwartzenberger
FYDA FREIGHTLINER
WESTERN STAR ZANESVILLE
5005 EAST PIKE
ZANESVILLE, OH 43701
Phone:

Attachment to Ordinance 2020-65
A proposal for
OH City of Zanesville
ODOT CO-OP #023-20 State Bid
Prepared by
FYDA FREIGHTLINER WESTERN STAR ZANESVILLE
Dustin Schwartzenberger

Feb 13, 2020

Western Star 4700SB

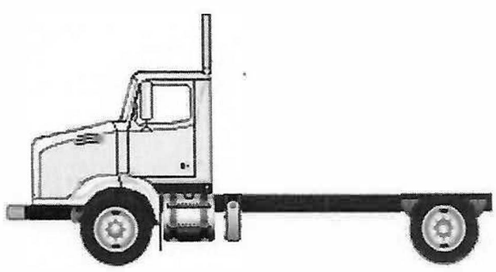

Components shown may not reflect all spec'd options and are not to scale

Prepared for:
Bill Rosser
OH City of Zanesville
1084 Central Ave
Zanesville, OH 43701
Phone: 740-819-8937

Prepared by:
Dustin Schwartzenberger
FYDA FREIGHTLINER
WESTERN STAR ZANESVILLE
5005 EAST PIKE
ZANESVILLE, OH 43701
Phone:

Attachment to Ordinance 2020-65

SPECIFICATION PROPOSAL

Data Code	Description	Weight Front	Weight Rear
Price Level			
PRL-20T	WESTERN STAR 4700 PRL-20T (EFF:04/30/19)		
Data Version			
DRL-003	SPECPRO21 DATA RELEASE VER 003		
Vehicle Configuration			
001-451	4700 SET-BACK FRONT AXLE CHASSIS	9,215	6,480
004-221	2021 MODEL YEAR SPECIFIED		
002-004	SET BACK AXLE - TRUCK		
019-004	STRAIGHT TRUCK PROVISION, NON-TOWING		
003-001	LH PRIMARY STEERING LOCATION		
General Service			
AA1-002	TRUCK CONFIGURATION		
AA6-001	DOMICILED, USA 50 STATES (INCLUDING CALIFORNIA AND CARB OPT-IN STATES)		
A85-011	CONSTRUCTION SERVICE		
A84-1GM	GOVERNMENT BUSINESS SEGMENT		
AA4-010	DIRT/SAND/ROCK COMMODITY		
AA5-002	TERRAIN/DUTY: 100% (ALL) OF THE TIME, IN TRANSIT, IS SPENT ON PAVED ROADS		
AB1-008	MAXIMUM 8% EXPECTED GRADE		
AB5-001	SMOOTH CONCRETE OR ASPHALT PAVEMENT - MOST SEVERE IN-TRANSIT (BETWEEN SITES) ROAD SURFACE		
995-1A5	WESTERN STAR VOCATIONAL WARRANTY		
A66-99D	EXPECTED FRONT AXLE(S) LOAD : 14700.0 lbs		
A68-99D	EXPECTED REAR DRIVE AXLE(S) LOAD : 23000.0 lbs		
A63-99D	EXPECTED GROSS VEHICLE WEIGHT CAPACITY : 37700.0 lbs		
Truck Service			
AA3-018	FRONT PLOW/END DUMP BODY		

Prepared for:
Bill Rosser
OH City of Zanesville
1084 Central Ave
Zanesville, OH 43701
Phone: 740-819-8937

Prepared by:
Dustin Schwartzenberger
FYDA FREIGHTLINER
WESTERN STAR ZANESVILLE
5005 EAST PIKE
ZANESVILLE, OH 43701
Phone:

Data Code	Description	Weight Front	Weight Rear
Engine			
101-22R	CUM L9 330 HP @ 2000 RPM, 2200 GOV RPM, 1000 LB/FT @ 1400 RPM	-850	-70
Electronic Parameters			
79A-075	75 MPH ROAD SPEED LIMIT		
79B-000	CRUISE CONTROL SPEED LIMIT SAME AS ROAD SPEED LIMIT		
79K-002	PTO MODE ENGINE RPM LIMIT - 700 RPM		
79L-001	PTO MODE THROTTLE OVERRIDE - LIMIT TO 800 RPM		
79M-001	PTO MODE BRAKE OVERRIDE - SERVICE BRAKE APPLIED		
79P-002	PTO RPM WITH CRUISE SET SWITCH - 700 RPM		
79Q-002	PTO RPM WITH CRUISE RESUME SWITCH - 700 RPM		
79S-008	PTO MODE CANCEL VEHICLE SPEED - 25 MPH		
79U-007	PTO GOVERNOR RAMP RATE - 250 RPM PER SECOND		
79V-001	FUEL DOSING OF AFTERTREATMENT ENABLED IN PTO MODE-CLEANS HYDROCARBONS AT HIGH TEMPERATURES ONLY		
80G-002	PTO MINIMUM RPM - 700		
80J-002	REGEN INHIBIT SPEED THRESHOLD - 5 MPH		
Engine Equipment			
99C-017	2016-2019 ONBOARD DIAGNOSTICS/2010 EPA/CARB/FINAL GHG17 CONFIGURATION		
99D-011	2008 CARB EMISSION CERTIFICATION - CLEAN IDLE (INCLUDES 6X4 INCH LABEL ON LOWER FORWARD CORNER OF DRIVER DOOR)		
13E-001	STANDARD OIL PAN		
105-001	ENGINE MOUNTED OIL CHECK AND FILL		
133-004	ONE PIECE VALVE COVER		
014-108	SIDE OF HOOD AIR INTAKE WITH FIREWALL MOUNTED DONALDSON AIR CLEANER WITH Safety ELEMENT AND INSIDE/OUTSIDE AIR WITH SNOW DOOR	10	
124-1D7	DR 12V 160 AMP 28-SI QUADRAMOUNT PAD ALTERNATOR WITH REMOTE BATTERY VOLT SENSE		
292-216	(3) DTNA GENUINE, AGM STARTING AND CYCLING, MIN 2190CCA, 570RC, THREADED STUD BATTERIES		

Prepared for:
Bill Rosser
OH City of Zanesville
1084 Central Ave
Zanesville, OH 43701
Phone: 740-819-8937

Prepared by:
Dustin Schwartzenberger
FYDA FREIGHTLINER
WESTERN STAR ZANESVILLE
5005 EAST PIKE
ZANESVILLE, OH 43701
Phone:

Data Code	Description	Weight Front	Weight Rear
290-1AC	PASSENGER SEAT BATTERY BOX VENTED TO OUTSIDE OF CAB		
282-013	BATTERY BOX MOUNTED UNDER PASSENGER SEAT		
291-017	WIRE GROUND RETURN FOR BATTERY CABLES WITH ADDITIONAL FRAME GROUND RETURN		
289-006	PLASTIC BATTERY BOX COVER		
293-072	POSITIVE LOAD DISCONNECT WITH DASH MOUNTED CONTROL SWITCH	8	
306-019	LOW VOLTAGE BATTERY DISCONNECT AT 12.3 VOLTS FOR ISOLATED CIRCUITS WITH LOCAL ALARM		
107-032	CUMMINS TURBOCHARGED 18.7 CFM AIR COMPRESSOR WITH INTERNAL Safety VALVE		
131-013	AIR COMPRESSOR DISCHARGE LINE		
152-041	ELECTRONIC ENGINE INTEGRAL SHUTDOWN PROTECTION SYSTEM		
128-076	CUMMINS EXHAUST BRAKE INTEGRAL WITH VARIABLE GEOMETRY TURBO WITH ON/OFF DASH SWITCH	20	
016-1C2	RH OUTBOARD UNDER STEP MOUNTED HORIZONTAL AFTERTREATMENT SYSTEM ASSEMBLY WITH RH B-PILLAR MOUNTED VERTICAL TAILPIPE		
28F-002	ENGINE AFTERTREATMENT DEVICE, AUTOMATIC OVER THE ROAD REGENERATION AND DASH MOUNTED REGENERATION REQUEST SWITCH		
239-026	10 FOOT 06 INCH (126 INCH+0/-5.9 INCH) EXHAUST SYSTEM HEIGHT		
237-1CR	RH CURVED VERTICAL TAILPIPE B-PILLAR MOUNTED ROUTED FROM STEP		
23U-001	6 GALLON DIESEL EXHAUST FLUID TANK		
30N-003	100 PERCENT DIESEL EXHAUST FLUID FILL		
23Y-001	STANDARD DIESEL EXHAUST FLUID PUMP MOUNTING		
43X-002	LH MEDIUM DUTY STANDARD DIESEL EXHAUST FLUID TANK LOCATION		
242-001	STAINLESS STEEL AFTERTREATMENT DEVICE/MUFFLER/TAILPIPE SHIELD		
273-018	HORTON DRIVEMASTER ADVANTAGE ON/OFF FAN DRIVE		
276-001	AUTOMATIC FAN CONTROL WITHOUT DASH SWITCH, NON ENGINE MOUNTED		
110-003	CUMMINS SPIN ON FUEL FILTER		

Prepared for:
Bill Rosser
OH City of Zanesville
1084 Central Ave
Zanesville, OH 43701
Phone: 740-819-8937

Prepared by:
Dustin Schwartzenberger
FYDA FREIGHTLINER
WESTERN STAR ZANESVILLE
5005 EAST PIKE
ZANESVILLE, OH 43701
Phone:

Data Code	Description	Weight Front	Weight Rear
118-008	COMBINATION FULL FLOW/BYPASS OIL FILTER		
266-017	1300 SQUARE INCH ALUMINUM RADIATOR	-20	
267-006	MOUNTING FOR FIREWALL MOUNTED SURGE TANK		
103-039	ANTIFREEZE TO -34F, OAT (NITRITE AND SILICATE FREE) EXTENDED LIFE COOLANT		
171-007	GATES BLUE STRIPE COOLANT HOSES OR EQUIVALENT		
172-001	CONSTANT TENSION HOSE CLAMPS FOR COOLANT HOSES		
270-016	RADIATOR DRAIN VALVE		
168-002	LOWER RADIATOR GUARD		
138-011	PHILLIPS-TEMRO 1000 WATT/115 VOLT BLOCK HEATER	4	
166-998	NO OIL PREHEATER		
140-022	CHROME ENGINE HEATER RECEPTACLE MOUNTED UNDER LH DOOR		
134-001	ALUMINUM FLYWHEEL HOUSING		
132-004	ELECTRIC GRID AIR INTAKE WARMER		
155-055	DELCO 12V 39MT HD/OCP STARTER WITH THERMAL PROTECTION AND INTEGRATED MAGNETIC SWITCH	-35	
Transmission			
342-582	ALLISON 3000 RDS AUTOMATIC TRANSMISSION WITH PTO PROVISION	-110	-35
Transmission Equipment			
343-339	ALLISON VOCATIONAL PACKAGE 223 - AVAILABLE ON 3000/4000 PRODUCT FAMILIES WITH VOCATIONAL MODELS RDS, HS, MH AND TRV		
84B-002	ALLISON VOCATIONAL RATING FOR CONCRETE MIXER APPLICATIONS ONLY AVAILABLE WITH 3000 PRODUCT FAMILIES		
84C-023	PRIMARY MODE GEARS, LOWEST GEAR 1, START GEAR 1, HIGHEST GEAR 6, AVAILABLE FOR 3000/4000 PRODUCT FAMILIES ONLY		
84D-023	SECONDARY MODE GEARS, LOWEST GEAR 1, START GEAR 1, HIGHEST GEAR 6, AVAILABLE FOR 3000/4000 PRODUCT FAMILIES ONLY		
84E-013	S1 PERFORMANCE PRIMARY SHIFT SCHEDULE, AVAILABLE FOR 3000/4000 PRODUCT FAMILIES ONLY		

Prepared for:
Bill Rosser
OH City of Zanesville
1084 Central Ave
Zanesville, OH 43701
Phone: 740-819-8937

Prepared by:
Dustin Schwartzenberger
FYDA FREIGHTLINER
WESTERN STAR ZANESVILLE
5005 EAST PIKE
ZANESVILLE, OH 43701
Phone:

Data Code	Description	Weight Front	Weight Rear
84F-013	S2 PERFORMANCE 2 SECONDARY SHIFT SCHEDULE, AVAILABLE FOR 3000/4000 PRODUCT FAMILIES ONLY		
84G-009	1800 RPM PRIMARY MODE SHIFT SPEED		
84H-009	1800 RPM SECONDARY MODE SHIFT SPEED		
84N-200	FUEL SENSE 2.0 DISABLED - PERFORMANCE - TABLE BASED		
85H-159	MAXIMUM OUTPUT SPEED FOR PTO OPERATION 4000 RPM - ALLISON 5TH GEN TRANSMISSIONS		
85P-998	NO REAR PTO TRANSMISSION RANGE		
34C-011	ELECTRONIC TRANSMISSION WIRING TO CUSTOMER INTERFACE CONNECTOR		
362-823	CUSTOMER INSTALLED CHELSEA 280 SERIES PTO		
363-001	PTO MOUNTING, LH SIDE OF MAIN TRANSMISSION		
341-018	MAGNETIC PLUGS, ENGINE DRAIN, TRANSMISSION DRAIN, AXLE(S) FILL AND DRAIN		
345-003	PUSH BUTTON ELECTRONIC SHIFT CONTROL, DASH MOUNTED		
97G-004	TRANSMISSION PROGNOSTICS - ENABLED 2013		
370-015	WATER TO OIL TRANSMISSION COOLER, IN RADIATOR END TANK		
346-003	TRANSMISSION OIL CHECK AND FILL WITH ELECTRONIC OIL LEVEL CHECK		
35T-001	SYNTHETIC TRANSMISSION FLUID (TES-295 COMPLIANT)		
Front Axle and Equipment			
400-1A8	DETROIT DA-F-14.7-3 14,700# FF1 71.5 KPI/3.74 DROP SINGLE FRONT AXLE	-190	
402-049	MERITOR 16.5X5 Q+ CAST SPIDER CAM FRONT BRAKES, DOUBLE ANCHOR, FABRICATED SHOES	-10	
403-002	NON-ASBESTOS FRONT BRAKE LINING		
419-023	CONMET CAST IRON FRONT BRAKE DRUMS		
409-006	FRONT OIL SEALS		
408-001	VENTED FRONT HUB CAPS WITH WINDOW, CENTER AND SIDE PLUGS - OIL		
416-022	STANDARD SPINDLE NUTS FOR ALL AXLES		
405-016	MERITOR 5.5 INCH HANDED AUTOMATIC FRONT SLACK ADJUSTERS		

Prepared for:
Bill Rosser
OH City of Zanesville
1084 Central Ave
Zanesville, OH 43701
Phone: 740-819-8937

Prepared by:
Dustin Schwartzenberger
FYDA FREIGHTLINER
WESTERN STAR ZANESVILLE
5005 EAST PIKE
ZANESVILLE, OH 43701
Phone:

Data Code	Description	Weight Front	Weight Rear
406-001	STANDARD KING PIN BUSHINGS		
536-012	TRW TAS-85 POWER STEERING		
539-003	POWER STEERING PUMP		
534-003	4 QUART POWER STEERING RESERVOIR	5	
533-001	OIL/AIR POWER STEERING COOLER	5	
40T-003	SYNTHETIC 50W FRONT AXLE LUBE		
Front Suspension			
620-004	16,000# FLAT LEAF FRONT SUSPENSION		
619-004	GRAPHITE BRONZE BUSHINGS WITH SEALS - FRONT SUSPENSION		
410-001	FRONT SHOCK ABSORBERS		
Rear Axle and Equipment			
420-051	RS-23-160 23,000# R-SERIES SINGLE REAR AXLE		-2,260
421-563	5.63 REAR AXLE RATIO		
424-001	IRON REAR AXLE CARRIER WITH STANDARD AXLE HOUSING		
386-073	MXL 17T MERITOR EXTENDED LUBE MAIN DRIVELINE WITH HALF ROUND YOKES	-60	-60
452-001	DRIVER CONTROLLED TRACTION DIFFERENTIAL - SINGLE REAR AXLE		20
878-018	(1) DRIVER CONTROLLED DIFFERENTIAL LOCK REAR VALVE FOR SINGLE DRIVE AXLE		
87B-008	INDICATOR LIGHT FOR EACH DRIVER CONTROLLED TRACTION DEVICE SWITCH		
423-033	MERITOR 16.5X7 Q+ CAST SPIDER HEAVY DUTY CAM REAR BRAKES, DOUBLE ANCHOR, FABRICATED SHOES		
433-002	NON-ASBESTOS REAR BRAKE LINING		
434-012	BRAKE CAMS AND CHAMBERS ON REAR SIDE OF DRIVE AXLE(S)		
451-023	CONMET CAST IRON REAR BRAKE DRUMS		
425-002	REAR BRAKE DUST SHIELDS		5
440-006	REAR OIL SEALS		
426-100	WABCO TRISTOP D LONGSTROKE 1-DRIVE AXLE SPRING PARKING CHAMBERS		-20
428-002	MERITOR AUTOMATIC REAR SLACK ADJUSTERS		
41T-002	SYNTHETIC 75W-90 REAR AXLE LUBE		
Rear Suspension			

Prepared for:
Bill Rosser
OH City of Zanesville
1084 Central Ave
Zanesville, OH 43701
Phone: 740-819-8937

Prepared by:
Dustin Schwartzenberger
FYDA FREIGHTLINER
WESTERN STAR ZANESVILLE
5005 EAST PIKE
ZANESVILLE, OH 43701
Phone:

Data Code	Description	Weight Front	Weight Rear
622-1DF	30,000# FLAT LEAF SPRING REAR SUSPENSION WITH HELPER AND RADIUS ROD		150
621-001	SPRING SUSPENSION - NO AXLE SPACERS		
431-001	STANDARD AXLE SEATS IN AXLE CLAMP GROUP		
623-005	FORE/AFT CONTROL RODS		
Brake System			
490-101	WABCO 4S/4M ABS WITH TRACTION CONTROL, WITH ATC OFF-ROAD SWITCH		
871-001	REINFORCED NYLON, FABRIC BRAID AND WIRE BRAID CHASSIS AIR LINES		
904-001	FIBER BRAID PARKING BRAKE HOSE		
412-001	STANDARD BRAKE SYSTEM VALVES		
432-003	RELAY VALVE WITH 5-8 PSI CRACK PRESSURE, NO REAR PROPORTIONING VALVE		
480-088	WABCO SYSTEM SAVER HP WITH INTEGRAL AIR GOVERNOR AND HEATER		
483-004	WABCO OIL COALESCING FILTER FOR AIR DRYER		
479-003	AIR DRYER MOUNTED INBOARD ON LH RAIL		
460-058	STEEL AIR TANKS MOUNTED AFT INSIDE AND/OR BELOW FRAME JUST FORWARD OF REAR SUSPENSION		
477-001	PULL CABLE ON WET TANK, PETCOCK DRAIN VALVES ON ALL OTHER AIR TANKS		
Trailer Connections			
1AZ-998	NO TRAILER RECEPTACLE BRACKET		
Wheelbase & Frame			
545-390	3900MM (154 INCH) WHEELBASE		
546-101	11/32X3-1/2X10-15/16 INCH STEEL FRAME (8.73MMX277.8MM/0.344X10.94 INCH) 120KSI		
547-034	PARTIAL INNER FRAME REINFORCEMENT AT FRONT SUSPENSION	195	-5
548-803	BODY COMPANY INSTALLED ADDITIONAL FRONT FRAME REINFORCEMENT FOR SNOW PLOW		
552-010	1000MM (39 INCH) REAR FRAME OVERHANG		
55W-003	FRAME OVERHANG RANGE: 31 INCH TO 40 INCH	20	-120
549-002	24 INCH INTEGRAL FRONT FRAME EXTENSION	122	-10
AC8-99D	CALC'D BACK OF CAB TO REAR SUSP C/L (CA) : 90.24 in		

Prepared for:
Bill Rosser
OH City of Zanesville
1084 Central Ave
Zanesville, OH 43701
Phone: 740-819-8937

Prepared by:
Dustin Schwartzenberger
FYDA FREIGHTLINER
WESTERN STAR ZANESVILLE
5005 EAST PIKE
ZANESVILLE, OH 43701
Phone:

Data Code	Description	Weight Front	Weight Rear
AE8-99D	CALCULATED EFFECTIVE BACK OF CAB TO REAR SUSPENSION C/L (CA) : 87.24 in		
AE4-99D	CALC'D FRAME LENGTH - OVERALL : 262.55		
ZF1-99D	FRAME HEIGHT TOP FRONT UNLADEN : 42.43 in		
ZF2-99D	FRAME HEIGHT TOP FRONT LADEN : 39.6 in		
ZF3-99D	FRAME HEIGHT TOP REAR UNLADEN : 41.84 in		
ZF4-99D	FRAME HEIGHT TOP REAR LADEN : 39.23 in		
FSS-0LH	CALCULATED FRAME SPACE LH SIDE : 50.05 in		
FSS-0RH	CALCULATED FRAME SPACE RH SIDE : 164.23 in		
AM6-99D	CALC'D SPACE AVAILABLE FOR DECKPLATE : 90.69 in		
553-001	SQUARE END OF FRAME		
559-001	STANDARD WEIGHT ENGINE CROSSMEMBER		
561-001	STANDARD CROSSMEMBER BACK OF TRANSMISSION		
562-001	STANDARD MIDSHIP #1 CROSSMEMBER(S)		
572-001	STANDARD REARMOST CROSSMEMBER		
565-002	HEAVY DUTY SUSPENSION CROSSMEMBER		
568-001	STANDARD WEIGHT REAR SUSPENSION CROSSMEMBER		
Chassis Equipment			
556-1E5	14 INCH PAINTED STEEL BUMPER		
574-001	BUMPER MOUNTING FOR SINGLE LICENSE PLATE		
586-015	FRONT ANTI-SPRAY CAB MOUNTED MUDFLAPS		
551-007	GRADE 8 THREADED HEX HEADED FRAME FASTENERS		
44Z-002	EXTERIOR HARNESSES WRAPPED IN ABRASION TAPE		
Fuel Tanks			
204-151	60 GALLON/227 LITER ALUMINUM FUEL TANK - LH		
218-006	25 INCH DIAMETER FUEL TANK(S)		
215-006	POLISHING OF FUEL/HYDRAULIC TANK(S) WITH POLISHED STAINLESS STEEL BANDS		
212-007	FUEL TANK(S) FORWARD		
664-002	POLISHED STEP FINISH		
205-002	CHROME FUEL TANK CAP(S)		
122-1H8	DAVCO 245 FUEL/WATER SEPARATOR WITH 12 VOLT HEAT AND WATER IN FUEL SENSOR	20	

Prepared for:
Bill Rosser
OH City of Zanesville
1084 Central Ave
Zanesville, OH 43701
Phone: 740-819-8937

Prepared by:
Dustin Schwartzenberger
FYDA FREIGHTLINER
WESTERN STAR ZANESVILLE
5005 EAST PIKE
ZANESVILLE, OH 43701
Phone:

Data Code	Description	Weight Front	Weight Rear
216-020	EQUIFLO INBOARD FUEL SYSTEM		
202-016	HIGH TEMPERATURE REINFORCED NYLON FUEL LINE		
221-998	NO FUEL COOLER		
Tires			
093-2DV	CONTINENTAL HSC1 12R22.5 16 PLY RADIAL FRONT TIRES	50	
094-1YV	CONTINENTAL HDC3 11R22.5 16 PLY RADIAL REAR TIRES		96
Hubs			
418-060	CONMET PRESET PLUS PREMIUM IRON FRONT HUBS		
450-060	CONMET PRESET PLUS PREMIUM IRON REAR HUBS		
Wheels			
502-356	ALCOA ULTRA ONE 89U64X 22.5X9.00 10-HUB PILOT 5.99 INSET ALUMINUM FRONT WHEELS	-28	
505-1EF	ALCOA LVL ONE 88367X 22.5X8.25 10-HUB PILOT ALUMINUM DISC REAR WHEELS		-100
50T-998	NO FRONT AXLE WHEEL/HUB COVER		
496-011	FRONT WHEEL MOUNTING NUTS		
497-011	REAR WHEEL MOUNTING NUTS		
Cab Exterior			
829-1A8	110 INCH BBC STEEL CONVENTIONAL CAB		
82A-023	WESTERN STAR PAINTED ALUMINUM CAB SKIRT		
650-044	AIR CAB MOUNTS WITH CHECK VALVE		
705-056	STAINLESS STEEL SILL PLATES WITH RACEWAY	5	
648-002	NONREMOVABLE BUGSCREEN MOUNTED BEHIND GRILLE		
667-001	FRONT FENDERS		
754-001	2 INCH FENDER EXTENSIONS	5	
678-034	LH AND RH EXTERIOR GRAB HANDLES WITH RUBBER INSERTS AND RH INTERIOR GRAB HANDLE MOUNTED TO A POST		
646-008	STATIONARY BRIGHT FINISH GRILLE		
65X-003	CHROME HOOD MOUNTED AIR INTAKE GRILLE		
640-008	GALVANEALED STEEL SEVERE SERVICE CAB		
644-004	FIBERGLASS HOOD		

Prepared for:
Bill Rosser
OH City of Zanesville
1084 Central Ave
Zanesville, OH 43701
Phone: 740-819-8937

Prepared by:
Dustin Schwartzenberger
FYDA FREIGHTLINER
WESTERN STAR ZANESVILLE
5005 EAST PIKE
ZANESVILLE, OH 43701
Phone:

Data Code	Description	Weight Front	Weight Rear
727-096	DUAL ROUND AIR HORNS, SINGLE BASE, MOUNTED UNDER CAB		
726-001	SINGLE ELECTRIC HORN		
657-1CC	ALL UNIT(S) KEYED ALIKE WITH CUSTOMER SPECIFIED KEY NUMBER D420		
575-001	REAR LICENSE PLATE MOUNT END OF FRAME		
312-031	SINGLE RECTANGULAR H4 HALOGEN HEADLIGHTS WITH BRIGHT BEZELS		
302-001	(5) AMBER MARKER LIGHTS		
314-824	WIRING AND SWITCH FOR CUSTOMER FURNISHED SNOW PLOW LAMPS WITH DUAL CONNECTIONS AT BUMPER		
294-001	INTEGRAL STOP/TAIL/BACKUP LIGHTS		
300-015	STANDARD FRONT TURN SIGNAL LAMPS		
744-009	DUAL WEST COAST STAINLESS STEEL HEATED MIRRORS WITH LIGHTS		
797-001	DOOR MOUNTED MIRRORS		
796-001	102 INCH EQUIPMENT WIDTH		
743-1AA	LH AND RH SUREPLUS 574 8 INCH BRIGHT FINISH HEATED CONVEX MIRRORS WITH SEPARATE ADJUSTMENT, MOUNTED BELOW MIRROR		
74A-001	RH DOWN VIEW MIRROR		
729-001	STANDARD SIDE/REAR REFLECTORS		
677-055	RH AFTERTREATMENT SYSTEM CAB ACCESS WITH POLISHED DIAMOND PLATE COVER		
768-046	17.5X35 INCH TINTED REAR WINDOW		
661-006	TINTED DOOR GLASS		
654-006	RH ELECTRIC AND LH MANUAL WINDOWS	2	
663-002	2-PIECE TINTED CURVED GASKET MOUNTED WINDSHIELD		
659-026	2 GALLON WINDSHIELD WASHER RESERVOIR WITH FLUID LEVEL INDICATOR, MOUNTED UNDER CAB, WITH REMOTE FILL		
Cab Interior			
707-1D4	SMOKY MOUNTAIN GRAY VINYL PREMIUM INTERIOR		
70K-005	BLACK HARD TRIM		
706-049	BASE LEFT HAND DOOR TRIM		
708-049	BASE RIGHT HAND DOOR TRIM		
772-007	BLACK MATS WITH DOUBLE INSULATION		

Prepared for:
Bill Rosser
OH City of Zanesville
1084 Central Ave
Zanesville, OH 43701
Phone: 740-819-8937

Prepared by:
Dustin Schwartzenberger
FYDA FREIGHTLINER
WESTERN STAR ZANESVILLE
5005 EAST PIKE
ZANESVILLE, OH 43701
Phone:

Data Code	Description	Weight Front	Weight Rear
785-007	DASH MOUNTED ASH TRAY AND LIGHTER, DRIVER SIDE		
691-001	FORWARD ROOF MOUNTED CONSOLE		
693-025	LH AND RH DOOR MAP POCKETS		
741-015	(2) COAT HOOKS ON BACKWALL OF CAB		
742-032	(1) DOUBLE CUP HOLDER WITH CELL PHONE HOLDER LH OR RH DASH		
680-034	TWO-TONE CHARCOAL UPPER/COOL GRAY LOWER SOFT TOUCH WING DASH WITH BLACK DRIVER SIDE COSMETIC UNDER DASH COVER		
700-023	HEATER, DEFROSTER AND AIR CONDITIONER WITH CONSTANT TEMPERATURE CONTROL AND COSMETIC COVER		
701-016	HVAC DUCTING WITH FOAM MAIN FRESH AIR FILTER		
703-005	MAIN HVAC CONTROLS WITH RECIRCULATION SWITCH		
170-015	STANDARD HEATER PLUMBING		
130-041	VALEO HEAVY DUTY A/C REFRIGERANT COMPRESSOR		
698-001	RADIATOR MOUNTED AIR CONDITIONER CONDENSER		
702-002	BINARY CONTROL, R-134A		
739-001	CAB INSULATION		
285-033	AUTOMATIC SELF-RESET CIRCUIT BREAKERS/FUSES IN DASH POWER DISTRIBUTION BOXES AND FUSES IN AUXILIARY POWER DISTRIBUTION BOXES		
324-075	DOOR ACTIVATED DOME LIGHT, UNDER DASH LIGHT AND LH AND RH DOOR MOUNTED COURTESY LIGHTS		
655-001	CAB DOOR LATCHES WITH MANUAL DOOR LOCKS		
756-1DD	BASIC HIGH BACK AIR SUSPENSION DRIVER SEAT WITH 1 CHAMBER AIR LUMBAR, INTEGRATED CUSHION EXTENSION AND REAR CUSHION TILT		
760-294	BATTERY BOX MID BACK NON SUSPENSION PASSENGER SEAT		
759-007	DUAL DRIVER SEAT ARMRESTS, NO PASSENGER SEAT ARMRESTS	4	
758-039	MORDURA CLOTH DRIVER SEAT		
761-039	MORDURA CLOTH PASSENGER SEAT		
763-003	3 POINT DRIVER AND PASSENGER SEAT BELT RETRACTORS		

Prepared for:
Bill Rosser
OH City of Zanesville
1084 Central Ave
Zanesville, OH 43701
Phone: 740-819-8937

Prepared by:
Dustin Schwartzenberger
FYDA FREIGHTLINER
WESTERN STAR ZANESVILLE
5005 EAST PIKE
ZANESVILLE, OH 43701
Phone:

Data Code	Description	Weight Front	Weight Rear
532-002	ADJUSTABLE TILT AND TELESCOPING STEERING COLUMN		
540-045	4-SPOKE 18 INCH (450MM) LEATHER WRAPPED STEERING WHEEL WITH SWITCHES		
765-002	DRIVER AND PASSENGER INTERIOR SUN VISORS		
Instruments & Controls			
185-002	NON-ADJUSTABLE SUSPENDED PEDALS		
106-002	ELECTRONIC FOOT ACCELERATOR		
870-002	BRIGHT ARGENT FINISH GAUGE BEZELS		
732-018	ROYAL ROSEWOOD MATTE FINISH DRIVER INSTRUMENT PANEL		
734-017	ROSEWOOD VINYL MATTE FINISH CENTER INSTRUMENT PANEL INSERT		
486-001	LOW AIR PRESSURE INDICATOR LIGHT AND AUDIBLE ALARM		
840-002	2 INCH PRIMARY AND SECONDARY AIR PRESSURE GAUGES		
198-002	INTAKE MOUNTED AIR RESTRICTION INDICATOR WITH GRADUATIONS		
721-021	87 DB TO 112 DB SELF-ADJUSTING BACKUP ALARM		3
149-015	ELECTRONIC CRUISE CONTROL WITH CONTROLS ON STEERING WHEEL SPOKES		
156-007	KEY OPERATED IGNITION SWITCH AND INTEGRAL START POSITION; 4 POSITION OFF/RUN/START/ACCESSORY		
811-041	ICU4ME DRIVER MESSAGE CENTER WITH GRAPHICAL DISPLAY, BLACK FACE GAUGES, DIAGNOSTICS AND DATA LINKED		
160-038	HEAVY DUTY ONBOARD DIAGNOSTICS INTERFACE CONNECTOR LOCATED BELOW LH DASH		
844-001	2 INCH ELECTRIC FUEL GAUGE		
148-003	PROGRAMMABLE RPM CONTROL - ELECTRONIC ENGINE		
44Y-001	CUSTOMER INTERFACE CONNECTOR LOCATED BETWEEN SEATS WITH CAPS		
856-001	ELECTRICAL ENGINE COOLANT TEMPERATURE GAUGE		
864-001	2 INCH TRANSMISSION OIL TEMPERATURE GAUGE		

Prepared for:
Bill Rosser
OH City of Zanesville
1084 Central Ave
Zanesville, OH 43701
Phone: 740-819-8937

Prepared by:
Dustin Schwartzenberger
FYDA FREIGHTLINER
WESTERN STAR ZANESVILLE
5005 EAST PIKE
ZANESVILLE, OH 43701
Phone:

Data Code	Description	Weight Front	Weight Rear
867-004	ELECTRONIC OUTSIDE TEMPERATURE SENSOR DISPLAY IN DRIVER MESSAGE CENTER		
372-063	(1) DASH MOUNTED PTO SWITCH WITH INDICATOR LAMP FOR CUSTOMER INSTALLED PTO	10	
852-002	ELECTRIC ENGINE OIL PRESSURE GAUGE		
746-115	AM/FM/WB WORLD TUNER RADIO WITH BLUETOOTH AND USB AND AUXILIARY INPUTS, J1939	10	
747-002	ROOF/OVERHEAD CONSOLE MOUNTED RADIO		
750-004	(4) RADIO SPEAKERS IN CAB		
753-021	AM/FM ANTENNA MOUNTED ON LH FRONT A-PILLAR	2	
748-026	POWER AND GROUND WIRING FOR CB RADIO IN OVERHEAD CONSOLE		
749-001	ROOF/OVERHEAD CONSOLE CB RADIO PROVISION		
752-017	MULTI-BAND AM/FM/WB/CB LH MIRROR MOUNTED ANTENNA SYSTEM		
810-042	ELECTRONIC MPH SPEEDOMETER WITH SECONDARY KPH SCALE, WITH ODOMETER		
817-008	STANDARD VEHICLE SPEED SENSOR WITH ADDITIONAL SIGNAL FOR CUSTOMER USE LOCATED BETWEEN DRIVER AND PASSENGER SEATS		
812-001	ELECTRONIC 3000 RPM TACHOMETER		
813-998	NO VEHICLE PERFORMANCE MONITOR	-5	
162-002	IGNITION SWITCH CONTROLLED ENGINE STOP		
836-015	DIGITAL VOLTAGE DISPLAY INTEGRAL WITH DRIVER DISPLAY		
660-008	SINGLE ELECTRIC WINDSHIELD WIPER MOTOR WITH DELAY		
304-059	CAB/TRAILER MARKER LIGHT SWITCH WITH SEPARATE HEADLIGHT SWITCH WITH HDLP/MRKR INTERRUPT SWITCH ON STEERING WHEEL & DASH SW FOR CUSTOMER FURNISHED SNOWPLOW LTS		
882-018	ONE VALVE PARKING BRAKE SYSTEM WITH DASH VALVE CONTROL AUTONEUTRAL AND WARNING INDICATOR		
299-039	SELF CANCELING TURN SIGNAL SWITCH, HEADLAMP HIGH/LOW AND FLASH, WASH/WIPE/INTERMITTENT		
298-036	PACIFIC INSIGHT ELECTRONIC FLASHER		

Prepared for:
Bill Rosser
OH City of Zanesville
1084 Central Ave
Zanesville, OH 43701
Phone: 740-819-8937

Prepared by:
Dustin Schwartzenberger
FYDA FREIGHTLINER
WESTERN STAR ZANESVILLE
5005 EAST PIKE
ZANESVILLE, OH 43701
Phone:

Data Code	Description	Weight Front	Weight Rear
Design			
065-000	PAINT: ONE SOLID COLOR		
Color			
980-5F6	CAB COLOR A: L0006EY WHITE ELITE EY		
96J-001	CAB INTERIOR PAINTED SAME AS CAB COLOR		
986-020	BLACK, HIGH SOLIDS POLYURETHANE CHASSIS PAINT		
964-993	BUMPER PAINTED SAME AS CHASSIS		
Certification / Compliance			
996-001	U.S. FMVSS CERTIFICATION, EXCEPT SALES CABS AND GLIDER KITS		
Secondary Factory Options			
95M-998	NO CUSTOMER FURNISHED MATERIAL SPECIFIED		
999-014	DEALER HAS BEEN ADVISED OF AND ACCEPTED RESPONSIBILITY FOR MODIFICATIONS DUE TO POSSIBLE PTO/CHASSIS INTERFERENCE		
Raw Performance Data			
AE4-99D	CALC'D FRAME LENGTH - OVERALL : 262.55		
AE8-99D	CALCULATED EFFECTIVE BACK OF CAB TO REAR SUSPENSION C/L (CA) : 87.24 in		
AM6-99D	CALC'D SPACE AVAILABLE FOR DECKPLATE : 90.69 in		

TOTAL VEHICLE SUMMARY

Weight Summary

	Weight Front	Weight Rear	Total Weight
Factory Weight+	8404 lbs	4074 lbs	12478 lbs
Total Weight+	8404 lbs	4074 lbs	12478 lbs

Prepared for:
Bill Rosser
OH City of Zanesville
1084 Central Ave
Zanesville, OH 43701
Phone: 740-819-8937

Prepared by:
Dustin Schwartzenberger
FYDA FREIGHTLINER
WESTERN STAR ZANESVILLE
5005 EAST PIKE
ZANESVILLE, OH 43701
Phone:

(+) Weights shown are estimates only.
If weight is critical, contact Customer Application Engineering.

(***) All cost increases for major components (Engines, Transmissions, Axles, Front and Rear Tires) and government mandated requirements, tariffs, and raw material surcharges will be passed through and added to factory invoices.

Prepared for:
Bill Rosser
OH City of Zanesville
1084 Central Ave
Zanesville, OH 43701
Phone: 740-819-8937

Prepared by:
Dustin Schwartzenberger
FYDA FREIGHTLINER
WESTERN STAR ZANESVILLE
5005 EAST PIKE
ZANESVILLE, OH 43701
Phone:

DIMENSIONS

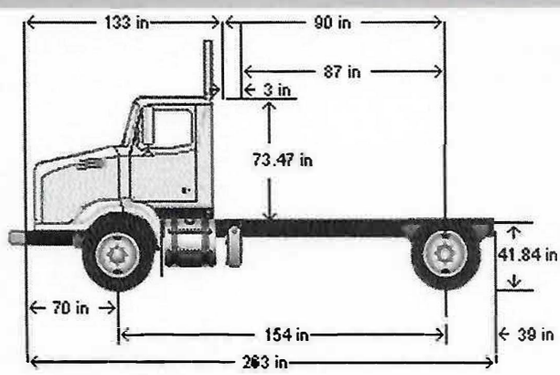

VEHICLE SPECIFICATIONS SUMMARY - DIMENSIONS

Model 4700SB
Wheelbase (545) ..... 3900MM (154 INCH) WHEELBASE
Rear Frame Overhang (552) ..... 1000MM (39 INCH) REAR FRAME OVERHANG
Fifth Wheel (578) ..... NO FIFTH WHEEL
- Mounting Location (577) ..... NO FIFTH WHEEL LOCATION
- Maximum Forward Position (in) 0
- Maximum Rearward Position (in) 0
- Amount of Slide Travel (in) 0
- Slide Increment (in) 0
- Desired Slide Position (in) 0.0

Cab Size (829) ..... 110 INCH BBC STEEL CONVENTIONAL CAB
Sleeper (682) ..... NO SLEEPER BOX/SLEEPERCAB
Exhaust System (016) ..... RH OUTBOARD UNDER STEP MOUNTED HORIZONTAL AFTERTREATMENT SYSTEM ASSEMBLY WITH RH B-PILLAR MOUNTED VERTICAL TAILPIPE

TABLE SUMMARY - DIMENSIONS

Prepared for:
Bill Rosser
OH City of Zanesville
1084 Central Ave
Zanesville, OH 43701
Phone: 740-819-8937

Prepared by:
Dustin Schwartzenberger
FYDA FREIGHTLINER
WESTERN STAR ZANESVILLE
5005 EAST PIKE
ZANESVILLE, OH 43701
Phone:

Dimensions	Inches
Bumper to Back of Cab (BBC)	133.2
Bumper to Centerline of Front Axle (BA)	69.9
Min. Cab to Body Clearance (CB)	3.0
Back of Cab to Centerline of Rear Axle(s) (CA)	90.2
Effective Back of Cab to Centerline of Rear Axle(s) (Effective CA)	87.2
Back of Cab Protrusions (Exhaust/Intake) (CP)	2.0
Back of Cab Protrusions (Side Extenders/Trim Tab) (CP)	0.0
Back of Cab Protrusions (CNG Tank)	0.0
Back of Cab Clearance (CL)	3.0
Back of Cab to End of Frame	129.6
Cab Height (CH)	7[illegible]35
Wheelbase (WB)	153.5
Frame Overhang (OH)	39.4
Overall Length (OAL)	262.9
Rear Axle Spacing	0.0
Unladen Frame Height at Centerline of Rear Axle	41.8

Performance calculations are estimates only. If performance calculations are critical, please contact Customer Application Engineering.

Prepared for:
Bill Rosser
OH City of Zanesville
1084 Central Ave
Zanesville, OH 43701
Phone: 740-819-8937

Prepared by:
Dustin Schwartzenberger
FYDA FREIGHTLINER
WESTERN STAR ZANESVILLE
5005 EAST PIKE
ZANESVILLE, OH 43701
Phone:

QUOTATION

4700 SET-BACK FRONT AXLE CHASSIS

SET BACK AXLE - TRUCK
CUM L9 330 HP @ 2000 RPM, 2200 GOV RPM, 1000 LB/FT @ 1400 RPM
ALLISON 3000 RDS AUTOMATIC TRANSMISSION WITH PTO PROVISION
RS-23-160 23,000# R-SERIES SINGLE REAR AXLE
30,000# FLAT LEAF SPRING REAR SUSPENSION WITH HELPER AND RADIUS ROD
DETROIT DA-F-14.7-3 14,700# FF1 71.5 KPI/3.74 DROP SINGLE FRONT AXLE
16,000# FLAT LEAF FRONT SUSPENSION

110 INCH BBC STEEL CONVENTIONAL CAB
3900MM (154 INCH) WHEELBASE
11/32X3-1/2X10-15/16 INCH STEEL FRAME (8.73MMX277.8MM/0.344X10.94 INCH) 120KSI
1000MM (39 INCH) REAR FRAME OVERHANG
PARTIAL INNER FRAME REINFORCEMENT AT FRONT SUSPENSION
BODY COMPANY INSTALLED ADDITIONAL FRONT FRAME REINFORCEMENT FOR SNOW PLOW

			PER UNIT		TOTAL
VEHICLE PRICE	TOTAL # OF UNITS (1)	$	84,763	$	84,763
EXTENDED WARRANTY		$	0	$	0
DEALER INSTALLED OPTIONS		$	0	$	0
CUSTOMER PRICE BEFORE TAX		**$**	***84,763***	**$**	***84,763***
TAXES AND FEES					
TAXES AND FEES		$	0	$	0
OTHER CHARGES		$	0	$	0
TRADE-IN					
TRADE-IN ALLOWANCE		$	(0)	$	(0)
BALANCE DUE	**(LOCAL CURRENCY)**	**$**	**84,763**	**$**	**84,763**

COMMENTS: Projected delivery on ___ / ___ / ___ provided the order is received before ___ / ___ / ___.
APPROVAL: Please indicate your acceptance of this quotation by signing below: Customer:
X_____ Date: ___ / ___ / ___.

Daimler Truck Financial
Financing that works for you.

See your local dealer for a competitive quote from Daimler Truck Financial, or contact us at Information@dtfoffers.com.
Daimler Truck Financial offers a variety of finance, lease and insurance solutions to fit your business needs. For more information about our products and services, visit our website at www.daimler-truckfinancial.com.

Attachment to Ordinance No. 2020-65

ACE EQUIPMENT 1130 Newark Road P.O. Box 2605 Zanesville, Ohio 43702-2605
888-799-6220 740-453-0551 FAX 740-453-7023

Quote: February 21, 2020
Order:
Salesman: Kyle Fleck

Name: Fyda Freightliner Western Star Zanesville
Address: 5005 East Pike, Zanesville, OH 43701
CITY OF ZANESVILLE

Chassis Information:	Year:	Make:	Model:	Color:	C/A:
	2020	Western Star	4700 96" CA		

Dump Body Specifications:

A. Galion Model 433FT-11
- 11' model 8.6 to 10.6 cubic yard capacity
- Inside width shall be 86"
- Sides shall be 36" high
- Tailgate shall be 44" high
- Front shall be 46" high

B. Sides and Front
- Shall be fabricated from 3/16" 201-2b stainless-steel
- Shall have 2" wide side board pockets
- Boxed top rail
- Smooth side design with intermediate horizontal "V" side braces (pressed out)
- All welds shall be continuous

C. Tailgate
- Shall be fabricated from 3/16" 201-2b stainless-steel
- Fully boxed upper and lower rails and 3 panel tailgate
- Welds shall be continuous
- Upper and lower dog-leg slotted chain keepers with sufficient chain to allow tailgate to lay flat
- Integral dirt shedding top frame rail
- Air tailgate control
- Tailgate to have (3) coal doors

D. Floor and Understructure
- Floor shall be fabricated from ¼" AR450 steel
- Radius floor wings at sides with one-piece center sheet

- Crossmemberless understructure – NO CROSSMEMBERS
- Full width rear apron
- 8" I-beam longsills

E. Tailgate Latch
- To be air controlled
- Shall be retractable type with minimum 1" flame cut latch finger
- Tailgate linkage to have grease zerks at rear

F. Lights and Reflectors
- Shall meet federal FMVSS #108
- (1) LED stop, turn, tail light recessed in each rear corner post
- (1) LED backup light recessed in each rear corner post
- LED clearance lights shall be recessed for protection and mounted in rubber sockets
- Wiring shall be one-piece and in a plastic convoluted loom

G. Cab Shield
- Shall be fabricated from 10-gauge 201-2b stainless-steel
- Shall be ½ roll (24" over cab)
- To be made stationary

H. Miscellaneous Items
- Power distribution panel to be mounted on inside back wall of cab
- (1) oval LED amber/green strobe light recessed in each rear corner post
- (1) oval LED amber/green strobe light recessed in each end of cab shield front facing
- (1) oval LED amber/green strobe light recessed in SS box on top of cab shield in each end of cab shield rear facing
- (1) oval LED amber/green strobe light recessed in each side of cab shield side facing
- (2) 4" LED spreader lights installed at rear
- (1) stainless-steel spring-loaded shovel holder installed street side
- (2) Stainless Steel Handles location TBD
- 2" x 10" oak side boards painted black installed each side
- Stainless-steel tarp rail full length of body both sides
- Pull out stainless-steel ladder installed front of body driver's side
- 97db Backup alarm
- ¾" Closure plate at rear with 20 Ton pintle hook hitch, D-rings and 6 pin trailer-plug, round
- Rear mud flaps
- Fleet Engineers poly fenders installed over rear wheels with stainless steel mount
- LED heated plow lights mounted on hood on stainless-steel brackets
- Underside of body and hoist components painted black

Hoist Specifications:

A. Galion Model CS100-4.5-3DA
- Front trunnion mount telescopic style hoist
- 12" doghouse built into front of body
- Double acting – power up/power down
- Body prop to support empty body weight
- Operated by central hydraulic system

Plow Specifications:

A. Henderson RSP19-11' Reversable Snow Plow
- 11' Length x 42" Height
- Integral Moldboard Shield
- Adjustable Cutting-Edge Trip- Torsion Spring
  - 5/8" x 8" One Piece AASHTO Punch
- Pin and Loop Oscillating Hitch Plow Portion
- HPH Truck Portion Hitch with side plates
- Moldboard Sheet Material – 10 ga GR50 Steel
- 4" x 2" x 10" Reversing Nitrided Cylinders
- Painted NY Yellow
- Standard Circle Frame with Top Mount Cylinders
- NO Running Gear
- (2) TruckLite Halogen Plow Lights mounted on stainless steel brackets
- 12" Rubber Deflector with SS Backer
- 36" Plastic Side Markers

Spreader Specifications:

A. Henderson TGS
- Hydraulic Drive
- Single Spinner
- 201 SS Material
- 6" Diameter Auger, Direct Drive
- Standard Brackets for 96" Wide Bodies

Central Hydraulic System Specifications:

The hydraulic pump will be cast iron, load sensing axial piston pump driven off the truck transmission by way of a Constant Mesh PTO. The pump will have an internal bleed-down compensator. The pump case drain line shall run from the pump directly to the reservoir without passing through any filter. This system will also have an automatic shutdown feature. In the instance that a hose would rupture, or system loses oil in another way, a float in the reservoir will trip the automatic shut down to stop flow of remining oil to prevent pump failure.

The truck functions will be controlled by a sectional, balance spool type valve to be mounted inside valve enclosure built into the oil reservoir and actuated by air control levers. This valve to be pressure compensated, load sensing, closed center type with a nominal rating of at least 30 GPM. Two sections to have individual flow compensators. It shall be arranged to operate the following functions:

1. Inlet/outlet
2. Double-acting underbody hoist
3. Double-acting snow plow lift cylinder
4. Snow plow power reversing cylinders
5. Pressure carry-over

A Freedom 2.1 electronic spreader control system also to be mounted in cab within easy reach of driver.

There will be a 10-micron return line filter located in the reservoir and it shall be equipped with a condition gauge and by-pass.

The reservoir to be stainless-steel, frame mounted, with a capacity of 30-gallons. It shall have a 3" port for the suction line, a 1 ¼" port for the return line and a magnetic drain plug. It shall have an internal baffle between the suction and return port and a separate port for the pump case drain. A sight/temperature gauge shall be installed on the front of the reservoir. The reservoir will have an enclosure to house the hydraulic control valve.

All hoses will conform to SAE standard and be equipped with 37-degree JIC swivel fittings at each component connection. The suction line to the pump shall be 2" diameter and conform to SAE standard 100R4. In addition, all connections that see system pressure shall be of the JIC or O-ring type to eliminate all chance of leaks. Rubber hoses ran to front for plow operation. Stainless-steel hydraulic tubing to be run to rear of truck spreader operation. Stainless-steel quick couplers mounted to county specifications.

Total Package Price: $62,454.00

Options:

1) TruckLite Heated LED Plow Light ILO Halogen Add: $400.00

This quotation becomes an order when signed here: Name_____Title_____

This order is not binding until approved by a company official. All quotations and delivery promises made, and orders accepted subject to delays caused by fire, accident, strikes or other causes beyond our control. Deliveries delayed by any of the above conditions shall not constitute cause for cancellation of this order. Prices subject to change without notice.

****A 3% CONVENIENCE FEE WILL APPLY TO ALL CREDIT CARD PURCHASES****

APPROXIMATE LEAD TIME AS OF TODAY IS 22-24 WEEKS FOR THE DUMP BODY WITH THAT SAID I AM ESTIMATING THIS BEING COMPLETED WITHIN 28-30 FROM RECEIPT OF PURCHASE ORDER.

Community Development Committee
Mark Baker, Chair

ORDINANCE NO. 2020-67
INTRODUCED BY COUNCIL

AN ORDINANCE AMENDING CHAPTER 1141.05 TABLE 15 PERMITTED AND CONDITIONAL USES IN BUSINESS DISTRICTS

WHEREAS, through a comprehensive review of the Planning and Zoning Code, The Community Development Department has identified a need to update the chapter; and

WHEREAS, according to Section 1117.01 "To adapt to changing development conditions and provide for the phased implementation of the City Comprehensive Plan, the Planning Commission may from time to time recommend, and Council may adopt, amendments to the provisions of the text of this Zoning Code…as provided by the Ohio Revised Code.", and

WHEREAS, the Community Development Staff has recognized a need to amend and update the Chapter 1141.05 Table 15: Permitted and Conditional Uses in Business Districts; and

WHEREAS, proper notification of the intent of this proposed legislation was given in a newspaper of general circulation; and

WHEREAS, after taking testimony and discussion during the March 17th, 2020 regular meeting, the Zanesville Planning Commission has recommended to City Council that the proposed amendments to Chapter 1141.05 be approved.

NOW, THEREFORE, BE IT ORDAINED by the Council of the City of Zanesville, State of Ohio; that

SECTION ONE: Chapter 1141.05 Table 15 of the City of Zanesville Planning and Zoning Code currently reads:

1141.05 TABLE 15: PERMITTED AND CONDITIONAL USES IN BUSINESS DISTRICTS.

Zoning Districts							
USES	C1	C2	C3	C4	O1	O2	I1
Abbatoirs or slaughterhouses							S
Accessory uses, buildings and structures to all conditional uses in the district, including off-street parking and loading and signs as provided in Chapters 1149 and 1153	C	C	C	C	C	C	P
Acid uses							S
Adult uses, as defined in this Code				S			S
Air rights development	S	S	S	S	S	S	S
Airports						S	S
Amusement arcades				S			
Animal hospitals		P	P	P			
Antique shops		P	P	P			
Any manufacturing, fabricating, processing, cleaning, servicing, testing, repair or assembly facilities that are not listed elsewhere as permitted or conditional uses, including facilities for abrasive products; boilers and tanks; chemicals; clay; coal, coke and tar products; fiberglass; foundries; glass; metal; textiles; transportation equipment; and any other facilities that are able to conform to the performance standards, Chapter 1161, for heavy industrial uses							S

Arsenals							S
Art shops or galleries		P	P	P			
Auction rooms				S			
Auditoriums and convention and exhibit halls				S		C	
Automated teller machines	P	P	P	P	P	P	P
Automobile Title Loans		S	S	S			
Automobile and truck rental establishments				C		C	
Automobile laundries/car wash				P			
Automobile laundries with five or less bays		C	C	C			

Zoning Districts							
USES	**C1**	**C2**	**C3**	**C4**	**O1**	**O2**	**I1**
Automobile part and accessory stores		P	P	P			
Automobile service stations	S	S	S	S			S
Automotive repair, major				S			S
Automotive repair, minor		C	C	C			
Bakery plants							P
Batch asphaltic concrete, Portland cement or mortar mixing plants							S
Beauty shops, barber shops and hair styling salons	P	P	P	P			
Bench signs		C	C	C			C
Bicycle sales, rental and repair shop		P	P	P			
Blood Plasma Center			S	S			
Blueprinting and photostating establishments		P	P	P		C	
Bottled gas dealers				P			
Building materials and products sales				P			
Building supply sales under 8,000 square feet with no outside storage or accessory structure		C	C	C			
Business machine sales, rental and service		P	P	P		C	
Camera and photographic supply stores		P	P	P			
Camping equipment sales		P	P	P			
Catering establishments		P	P	P			
Cemeteries	C	C	C	C	C	C	C
Child day care centers, as defined in this Code	S	S	S	S	S	S	
Clothing repair, hat repair and shoe repair stores and tailor shops	P	P	P	P			
Commercial schools, such as for business or electronics							P
Computer sales and rental		P	P	P			
Computer sales, rental and service						C	
Conditional public uses, as defined in this Code	C	C	C	C			C

Zoning Districts							
USES	C1	C2	C3	C4	O1	O2	I1
Contractors and construction offices				P			P
Crematories							C
Crematories as part of mortuaries		C	C	C	C	C	
Creosote							C
Currency exchanges	P	P	P	P		C	
Custom dressmaking establishments		P	P	P			
Department stores, junior department stores and discount department stores		P	P	P			
Distillation of tar							S
Domestic appliance stores, including radio, television, stereo, lighting, clock and music stores	P	P	P	P			
Donut shops	C	C	C	C		C	
Drug stores	P	P	P	P		C	
Drive-in established, as defined in this Code	C	C	C	C			
Dry cleaning plants and laundries							P
Dwelling unit of caretaker or guard							S
Dwelling units above the ground floor in buildings commercial buildings	P	P	P	P	P	P	
Dwelling units above the ground floor with a ground floor use permitted in O-1 and O-2 Districts meeting the minimum lot area requirements for RM- 2 uses, and all other requirements of the districts					P	P	
Educational institutions as defined in this Code	S	S	S	S	S	S	
E-Commerce	P	P	P	P	P	P	
E-Commerce & Distribution Facility	S	S	S	S			
Electrical showrooms and shops				P			
Employment agencies		P	P	P		P	
Equipment rental				P			
Exterminating services		P	P	P			

Zoning Districts							
USES	C1	C2	C3	C4	O1	O2	I1
Fat rendering							S
Feed, flour and grain storage							S
Fertilizer							S
Financial institutions, including banks, savings and loans, and commercial loan offices	P	P	P	P	P	P	
Florist shops	P	P	P	P		C	
Food and grocery stores under 5,000 square feet	P	P	P	P			
Food and grocery stores over 5,000 square feet	C	P	P	P			

Fortune tellers, palm readers, clairvoyants			P	P			
Fuel and ice sales			P	P			
Fuel storage, bulk				S			S
Furniture stores including upholstery when conducted as part of the retail operations and secondary hereto		P	P	P			
Furrier shops, including incidental stores and conditioning of fur		P	P	P			
Garden, Community	C	C	C	C	C	C	C
Game rooms, as defined in this Code	C	C	C	C			
Garden supply, tool and seed stores, including lawn mower, snowmobile and snow blower sales and service		P	P	P			
General retail	C	C	C	C		S	
Golf courses and country clubs, private	C	C	C	P	C	P	P
Graphics and drafting services					C	P	P
Greenhouses and nurseries				P			
Gunsmith shops		P	P	P			
Hardware stores		P	P	P			
Health clubs as defined in this Code		P	P	P		P	
High-nuisance manufacturing and processing operations involving:							S
Hobby and craft shops		P	P	P			

Zoning Districts							
USES	**C1**	**C2**	**C3**	**C4**	**O1**	**O2**	**I1**
Hospitals, nursing homes, group homes, mental health centers and related uses	S	S	S	S	S	S	
Hotels and motels		P	P	P		P	
Indoor amusement establishments, including bowling alleys, pool halls, dance halls, commercial swimming pools and skating rinks		C	C	C			
Insurance offices	P	P	P	P	P	P	
Interior decorating shops, including upholstery and the making of draperies, slip covers and other similar articles when conducted as part of the retail operations and secondary thereto		P	P	P			
Junk yards				S			S
Kennels, pet grooming and veterinary offices		P	P	P			
Laboratories, medical, dental, research and testing		P	P	P		P	P
Landfills, dumps and incinerators							S
Liquor stores (package goods only)	P	P	P	P			
Locksmith shops		P	P	P			
Low-nuisance light manufacturing, fabricating, processing, cleaning, servicing, testing, repair and assembly facilities not listed elsewhere as permitted or conditional uses that are able to conform to the performance standards, Chapter 1161, for light industry herein							P
Machinery sales				C			C

Mail order houses and letter shops				P		P	
Manufactured buildings approved by the Building Code for commercial use and conforming with the seven standards listed in Table 1137.05 Manufactured buildings, other than buildings or trailers for construction purposes, not complying with Table 1137.05 may be approved for a period not to exceed one year.		C	C	C			
Manufactured home sales (no open sales lot)				P			
Massage and massage services		S	S	S			

Zoning Districts							
USES	**C1**	**C2**	**C3**	**C4**	**O1**	**O2**	**I1**
Medical, dental and optometry offices and clinics	P	P	P	P	P	P	
Meeting and banquet halls		P	P	P		P	
Millinery shops		P	P	P			
Mini-warehouses				S			C
Model home and garage displays				S			
Monument sales (no open sales lot)				P			
Mortuaries, as defined in this Code		C	C	C	C	C	
Motor vehicle sales (no open sales lot) or rental, including cars, trucks, boats, trailers, recreational vehicles, motorcycles, motor scooters and mopeds				P			
Motor vehicle, trailer, and mobile home repair services				S			
Motor, rail or air freight terminals							C
Multi-family residential uses					C	C	
Natural or synthetic rubber, caoutchouc or gutta percha							C
Newspaper distribution agencies for home delivery and retail trade	P	P	P	P		P	
Newspaper, magazine and tobacco shops	P	P	P	P		C	
Nightclub			S	S			S
Offices, business and professional		P	P	P	P	P	
Offices, government, political and institutional		P	P	P	P	P	
Off-street parking lots, public garages or storage garages as principal uses			P	P		C	C
Off-street parking lots, public garages or storage garages, other than as accessory uses						C	
Open sales lots as defined in this Code as a principal or accessory use				S			
Ore reduction							S
Other temporary uses approved in accordance with provisions for temporary uses in Chapter 1129							P

Zoning Districts							
USES	**C1**	**C2**	**C3**	**C4**	**O1**	**O2**	**I1**
Outdoor advertising signs				P			P
Outdoor amusement establishments, including archery ranges, miniature golf and similar facilities				S			
Outdoor recreation or indoor/outdoor entertainment centers				S			S

Outdoor storage				S			S
Parks, playgrounds, golf courses, forest preserves, wildlife sanctuaries and other publicly owned open space	P	P	P	P	P	P	P
Pawnshops		S	S	S			
Permitted public uses, as defined in this Zoning Code	P	P	P	P	P	P	P
Pet shops		P	P	P			
Philanthropic and charitable institutions, as defined in this Code	C	C	C	C	C	C	
Photo processing stores	P	P	P	P			
Photography studios, including the development of film when conducted as part of the retail business		P	P	P			
Plazas and public spaces			P	P		P	
Plumbing and heating sales				P			
Post offices		P	P	P		P	
Print shops with six or fewer employees	P	P	P	P			
Printing and publishing establishments							P
Printing and publishing plants		C	C	C			
Processing or refining of petroleum or coal oil							S
Produce markets		P	P	P			
Quarries							S
Radio and television stations and studios			P	P		P	P
Radio and television towers		S	S	S		S	S
Real estate offices	P	P	P	P	P	P	
Recording studios			P	P		P	P

Zoning Districts							
USES	**C1**	**C2**	**C3**	**C4**	**O1**	**O2**	**I1**
Recreational institutions, as defined in this Code	C	C	C	C	C	C	
Recycling centers, solid waste							S
Religious institutions, as defined in this Code	C	C	C	C	C	C	
Research and development facilities						P	P
Restaurants	P	P	P	P			
Restaurants with live entertainment or dancing		C	C	C			
Restaurants, eat-in or carry-out, but not including live entertainment, dancing or serving of alcoholic beverages, or restaurants that are drive-in establishments as defined in this Code						C	
Restaurants, eat-in, carry-out or drive-in							P
Restaurants, eat-in, serving alcoholic beverages but without live entertainment or dancing	S	S	S	S		S	
Salt works							S
Sand and gravel extraction							S

Second hand stores and rummage shops		P	P	P			
Sewer cleaning and rodding service				P			
Sewing machine sales and service		P	P	P			
Smelters							S
Single Room Occupancy (SRO)				S			
Soap production							S
Stock yards or slaughter of animals or fowl							S
Streets and alleys	P	P	P	P	P	P	P
Studios for artists, musicians and photographers						P	
Swimming pool sales (no open sales lot)				P			
Synthetic polymers							S
Tallow, grease or lard							S
Tanning salons		P	P	P			

Zoning Districts							
USES	**C1**	**C2**	**C3**	**C4**	**O1**	**O2**	**I1**
Tanning, curing or storage of rawhides or skins							S
Tattoo parlors			S	S			
Taverns and bars with live entertainment or dancing		S	S	S			
Taverns and bars without live entertainment or dancing	S	S	S	S		S	
Taxidermists		P	P	P			
Temporary buildings or trailers for construction purposes for a period not to exceed the duration of construction	P	P	P	P	P	P	P
Theatres, indoor		P	P	P			
Ticket offices, theatre and amusement	P	P	P	P			
Ticket offices, transportation	P	P	P	P			
Tourist information and hospitality centers			P	P			
Trading stamp redemption centers		P	P	P			
Trailer parks and campgrounds				S			
Transfer stations, solid waste							S
Transportation ticket offices					P	P	
Travel bureaus		P	P	P	P	P	
Truck stops				S			
Union halls		P	P	P		P	
Uses that are not otherwise permitted or conditional uses in this or any other district and that are similar in the judgment of the Board of Zoning Appeals to conditional uses in this district	P	P	P	P	P	P	
Utilization or storage of over five pounds of detonable materials as provided under performance standards herein							S

Warehouses and distribution centers under 12,000SF				C			
Warehousing, storage and distribution facilities			S	S		S	P
Water softener service				P			
Wholesaling						S	P
Wrecking yards, as defined in this Code				S			S

(Ord. 18-77. Passed 7-23-18.)

SECTION TWO: Chapter 1141.05 Table 15 of the City of Zanesville Planning and Zoning Code shall be amended to read as follows:

1141.05 TABLE 15: PERMITTED AND CONDITIONAL USES IN BUSINESS DISTRICTS.

Zoning Districts							
USES	**C1**	**C2**	**C3**	**C4**	**O1**	**O2**	**I1**
Abbatoirs or slaughterhouses							S
Accessory uses, buildings and structures to all conditional uses in the district, including off-street parking and loading and signs as provided in Chapters 1149 and 1153	C	C	C	C	C	C	P
Acid uses							S
Adult uses, as defined in this Code				S			S
Air rights development	S	S	S	S	S	S	S
Airports						S	S
Amusement arcades				S			
Animal hospitals		P	P	P			
Antique shops		P	P	P			
Any manufacturing, fabricating, processing, cleaning, servicing, testing, repair or assembly facilities that are not listed elsewhere as permitted or conditional uses, including facilities for abrasive products; boilers and tanks; chemicals; clay; coal, coke and tar products; fiberglass; foundries; glass; metal; textiles; transportation equipment; and any other facilities that are able to conform to the performance standards, Chapter 1161, for heavy industrial uses							S
Arsenals							S
Art shops or galleries		P	P	P			
Auction rooms				S			
~~**Auditoriums and convention and exhibit halls**~~	-	-	-	~~**S**~~	-	~~**C**~~	-
Automated teller machines	P	P	P	P	P	P	P
Automobile Title Loans		S	S	S			
Automobile and truck rental establishments				C		C	
Automobile laundries/car wash		**S**	**S**	P			
~~**Automobile laundries with five or less bays**~~	-	~~**C**~~	~~**C**~~	~~**C**~~	-	-	-

Zoning Districts							
USES	C1	C2	C3	C4	O1	O2	I1
Automobile part and accessory stores		P	P	P			
~~**Automobile service stations**~~	~~**S**~~	~~**S**~~	~~**S**~~	~~**S**~~	-	-	~~**S**~~
Automotive repair, major			**S**	S			S
Automotive repair, minor	**S**	C	C	C			**S**
Bakery plants							P
Batch asphaltic concrete, Portland cement or mortar mixing plants							S
Beauty shops, barber shops and hair styling salons	P	P	P	P	**C**	**C**	
Bench signs		C	C	C			C
Bicycle sales, rental and repair shop		P	P	P			
Blood Plasma Center			S	S			
Blueprinting and photostating establishments		P	P	P		C	
Bottled gas dealers				P			
Building materials and products sales				~~**P**~~ **C**			**P**
Building supply sales under 8,000 square feet with no outside storage or accessory structure		C	C	C			
Business machine sales, rental and service		P	P	P		C	
Camera and photographic supply stores		P	P	P			
Camping equipment sales		P	P	P			
Camp Grounds				**S**		**S**	**S**
Catering establishments		P	P	P			
Cemeteries	C	C	C	C	C	C	C
Child day care centers, as defined in this Code	S	S	S	S	S	S	
Clothing repair, hat repair and shoe repair stores and tailor shops	P	P	P	P			
Coffee and Donut Shops	**P**	**P**	**P**	**P**		**C**	
~~**Commercial schools, such as for business or electronics**~~	-	-	-	-	-	-	~~**P**~~
Community Center		**C**	**C**	**C**	**S**	**S**	**S**
~~**Computer sales and rental**~~	-	~~**P**~~	~~**P**~~	~~**P**~~	-	-	-
Computer sales, rental and service		**P**	**P**	**P**		C	
Conditional public uses, as defined in this Code	C	C	C	C			C

Zoning Districts							
USES	C1	C2	C3	C4	O1	O2	I1
Conference and Convention Centers		**S**	**S**	**P**	**S**	**P**	**S**
~~Contractors and construction offices~~	-	-	-	~~P~~	-	-	~~P~~
Crematories		**C**	**C**	**C**	**S**	**S**	C
~~**Crematories as part of mortuaries**~~	-	~~**C**~~	~~**C**~~	~~**C**~~	~~**C**~~	~~**C**~~	-

Creosote							C
Currency exchanges	P	P	P	P		C	
Custom dressmaking establishments		P	P	P			
Department stores, junior department stores and discount department stores		P	P	P			
Detention/Correctional Facility							**S**
Distillation of tar							S
Domestic appliance stores, including radio, television, stereo, lighting, clock and music stores	P	P	P	P			
~~**Donut shops**~~	~~**C**~~	~~**C**~~	~~**C**~~	~~**C**~~	-	~~**C**~~	-
Drug stores	P	P	P	P		C	
Drive-in established, as defined in this Code	C	C	C	C			
Dry cleaning plants and laundries							P
~~**Dwelling unit of caretaker or guard**~~	-	-	-	-	-	-	~~**S**~~
Dwelling units above the ground floor ~~**in buildings commercial buildings**~~ **of a commercial use**	P	P	P	P	P	P	
~~**Dwelling units above the ground floor with a ground floor use permitted in O-1 and O-2 Districts meeting the minimum lot area requirements for RM-2 uses, and all other requirements of the districts**~~	-	-	-	-	~~**P**~~	~~**P**~~	-
Educational institutions as defined in this Code	S	S	S	S	S	S	
E-Commerce	P	P	P	P	P	P	
E-Commerce & Distribution Facility	S	S	S	S			**S**
Electrical showrooms and shops			**C**	P			
Employment agencies		P	P	P		P	
Equipment rental				P			**C**
Exterminating services		P	P	P			**C**

Zoning Districts							
USES	**C1**	**C2**	**C3**	**C4**	**O1**	**O2**	**I1**
Farmer's Markets	**C**	**C**	**C**	**C**	**C**	**C**	**C**
Fat rendering							S
Feed, flour and grain storage							S
Fertilizer							S
Financial institutions, including banks, savings and loans, and commercial loan offices	P	P	P	P	P	P	
Florist shops	P	P	P	P		C	
Food and grocery stores ~~**under 5,000 square feet**~~	~~**P**~~ **C**	P	P	P			
~~**Food and grocery stores over 5,000 square feet**~~	~~**C**~~	~~**P**~~	~~**P**~~	~~**P**~~	-	-	-
Food Trucks		**C**	**C**	**C**	**C**	**C**	
Fortune tellers, palm readers, clairvoyants			P	P			
~~**Fuel and ice sales**~~	-	-	~~**P**~~	~~**P**~~	-	-	-

Fuel storage, bulk				S			S
Furniture stores including upholstery when conducted as part of the retail operations and secondary hereto		P	P	P			
Furrier shops, including incidental stores and conditioning of fur		P	P	P			
Garden, Community	C	C	C	C	C	C	C
Game rooms, as defined in this Code	C	C	C	C			
Garden supply, tool and seed stores, including lawn mower, snowmobile and snow blower sales and service		P	P	P			
General retail	C	C	C	C		S	
Golf courses and country clubs, private	C	C	C	P	C	P	P
Graphics and drafting services					C	P	P
Greenhouses and nurseries				P			**C**
Group Homes			**S**	**S**		**S**	
Gunsmith shops		P	P	P			
Hardware stores		P	P	P			
Health clubs as defined in this Code		P	P	P		P	
High-nuisance manufacturing and processing operations involving:							S
Hobby and craft shops		P	P	P			

Zoning Districts							
USES	**C1**	**C2**	**C3**	**C4**	**O1**	**O2**	**I1**
Hospitals, nursing homes, ~~group homes~~, mental health centers and related uses	S	S	S	S	S	S	
Hotels and motels		~~P~~ **C**	P	P		P	
Indoor amusement establishments, including bowling alleys, pool halls, dance halls, commercial swimming pools and skating rinks		C	C	C			
Insurance offices	P	P	P	P	P	P	
Interior decorating shops, including upholstery and the making of draperies, slip covers and other similar articles when conducted as part of the retail operations and secondary thereto		P	P	P			
Junk yards				S			S
Kennels, pet grooming and veterinary offices		P	P	P		**C**	
Laboratories, medical, dental, research and testing		P	P	P		P	P
Landfills, dumps and incinerators							S
Licensed Firearm dealers, accessory use		**S**	**C**	**C**			
Licenses Firearm dealers, primary use			**S**	**S**			
Liquor stores (package goods only)	P	P	P	P			
Locksmith shops		P	P	P			
Low-nuisance light manufacturing, fabricating, processing, cleaning, servicing, testing, repair and assembly facilities not listed elsewhere as permitted or conditional uses that are able to conform to the performance standards, Chapter 1161, for light industry herein				**S**			P

Machinery sales				C			C
Mail order houses and letter shops				P		P	
Manufactured buildings approved by the Building Code for commercial use and conforming with the seven standards listed in Table 1137.05 Manufactured buildings, other than buildings or trailers for construction purposes, not complying with Table 1137.05 may be approved for a period not to exceed one year.		C	C	C			
Manufactured home sales (no open sales lot)				P			
Massage and massage services		~~S~~ C	~~S~~ C	~~S~~ C	S		

Zoning Districts							
USES	**C1**	**C2**	**C3**	**C4**	**O1**	**O2**	**I1**
Medical, dental and optometry offices and clinics	P	P	P	P	P	P	
~~**Meeting and banquet halls**~~	-	~~**P**~~	~~**P**~~	~~**P**~~	-	~~**P**~~	-
~~**Millinery shops**~~	-	~~**P**~~	~~**P**~~	~~**P**~~	-	-	-
Mini-warehouses				S			C
Model home and garage displays				S			
Monument sales (no open sales lot)				P			
Mortuaries, as defined in this Code		C	C	C	C	C	
Motor vehicle sales (no open sales lot) or rental, including cars, trucks, boats, trailers, recreational vehicles, motorcycles, motor scooters and mopeds				P			
Motor vehicle, trailer, and mobile home repair services				S			
Motor, rail or air freight terminals							C
Multi-family residential uses					C	C	
Natural or synthetic rubber, caoutchouc or gutta percha							C
Newspaper distribution agencies for home delivery and retail trade	P	P	P	P		P	
Newspaper, magazine and tobacco shops	P	P	P	P		C	
Nightclub			S	S			S
Offices, business and professional		P	P	P	P	P	
Offices, Construction and Contractor			**P**	**P**	**C**	**C**	**P**
Offices, government, political and institutional		P	P	P	P	P	
Off-street parking lots, public garages or storage garages as principal uses			P	P		C	C
~~**Off-street parking lots, public garages or storage garages, other than as accessory uses**~~	-	-	-	-	-	~~**C**~~	-
Open sales lots as defined in this Code as a principal or accessory use				S			
Ore reduction							S
Other temporary uses approved in accordance with provisions for temporary uses in Chapter 1129							P

Zoning Districts							
USES	**C1**	**C2**	**C3**	**C4**	**O1**	**O2**	**I1**
Outdoor advertising signs				P			P

Outdoor amusement establishments, including archery ranges, miniature golf and similar facilities				S			
Outdoor Café and Eating Areas	S	C	C	C		C	
~~**Outdoor recreation or indoor/outdoor entertainment centers**~~	-	-	-	~~S~~	-	-	~~S~~
Outdoor storage				S			S
Parks, playgrounds, golf courses, forest preserves, wildlife sanctuaries and other publicly owned open space	P	P	P	P	P	P	P
Pawnshops		S	S	~~S~~ C			
Permitted public uses, as defined in this Zoning Code	P	P	P	P	P	P	P
Pet shops		P	P	P			
Philanthropic and charitable institutions, as defined in this Code	C	C	C	C	C	C	
~~**Photo processing stores**~~	~~P~~	~~P~~	~~P~~	~~P~~	-	-	-
Photography studios, including the development of film when conducted as part of the retail business		P	P	P			
~~**Plazas and public spaces**~~	-	-	~~P~~	~~P~~	-	~~P~~	-
Plumbing and heating sales				P			P
Post offices		P	P	P		P	
Print shops with six or fewer employees	P	P	P	P			
Printing and publishing establishments		C	C	C			P
~~**Printing and publishing plants**~~	-	~~C~~	~~C~~	~~C~~	-	-	-
Processing or refining of petroleum or coal oil							S
~~**Produce markets**~~	-	~~P~~	~~P~~	~~P~~	-	-	-
Quarries							S
Radio and television stations and studios			P	P		P	P
Radio and television towers		S	S	S		S	S
Real estate offices	P	P	P	P	P	P	
Recording studios			P	P		P	P

Zoning Districts							
USES	**C1**	**C2**	**C3**	**C4**	**O1**	**O2**	**I1**
Recreational institutions, as defined in this Code	C	C	C	C	C	C	
Recycling centers, solid waste							S
Religious institutions, as defined in this Code	C	C	C	C	C	C	
Research and development facilities			C	C	P	P	P
Restaurants	P	P	P	P	C	C	C
~~**Restaurants with live entertainment or dancing**~~	-	~~C~~	~~C~~	~~C~~	-	-	-
~~**Restaurants, eat-in or carry-out, but not including live entertainment, dancing or serving of alcoholic beverages, or restaurants that are drive-in establishments as defined in this Code**~~	-	-	-	-	-	~~C~~	-
~~**Restaurants, eat-in, carry-out or drive-in**~~	-	-	-	-	-	-	~~P~~

Restaurants, eat-in, serving alcoholic beverages ~~but without live entertainment or dancing~~	S	S	S	**S**	S	S	**S**
Salt works							S
Sand and gravel extraction							S
Second hand stores and rummage shops		P	P	P	**C**	**C**	
Service Stations			**S**	**S**			**S**
Sewer cleaning and rodding service				P			**P**
~~Sewing machine sales and service~~	-	~~P~~	~~P~~	~~P~~	-	-	-
Smelters							S
Single Room Occupancy (SRO)			**S**	S			
Soap production							S
Stock yards or slaughter of animals or fowl							S
Streets and alleys	P	P	P	P	P	P	P
Studios for artists, musicians and photographers		**P**	**P**	**P**		~~P~~ **C**	
Swimming pool sales (no open sales lot)				P			
Synthetic polymers							S
Tallow, grease or lard							S
Tanning salons		P	P	P	**C**	**C**	

Zoning Districts							
USES	**C1**	**C2**	**C3**	**C4**	**O1**	**O2**	**I1**
Tanning, curing or storage of rawhides or skins							S
Tattoo parlors			S	S			
~~Taverns and bars with live entertainment or dancing~~	-	~~S~~	~~S~~	~~S~~	-	-	-
Taverns and bars ~~without live entertainment or dancing~~	S	S	~~S~~ **C**	~~S~~ **C**	**S**	S	**S**
Taxidermists		P	P	P			
Temporary buildings or trailers for construction purposes for a period not to exceed the duration of construction	P	P	P	P	P	P	P
Theatres, indoor		P	P	P			
Ticket offices, theatre ~~and~~ amusement **and Transportation**	P	P	P	P	**C**	**C**	
~~Ticket offices, transportation~~	~~P~~	~~P~~	~~P~~	~~P~~	-	-	-
Tourist information and hospitality centers			P	P			
~~Trading stamp redemption centers~~	-	~~P~~	~~P~~	~~P~~	-	-	-
Trailer parks ~~and campgrounds~~				S			
Transfer stations, solid waste							S
~~Transportation ticket offices~~	-	-	-	-	~~P~~	~~P~~	-
Travel bureaus		P	P	P	P	P	
Truck stops				S			

Union halls		P	P	P		P	
Uses that are not otherwise permitted or conditional uses in this or any other district and that are similar in the judgment of the ~~**Board of Zoning Appeals**~~ **Planning and Zoning Administrator** to conditional uses in this district	~~**P**~~ **C**	~~**P**~~ **C**	~~**P**~~ **C**	~~**P**~~ **C**	~~**P**~~ **C**	~~**P**~~ **C**	
Utilization or storage of over five pounds of detonable materials as provided under performance standards herein							S
Warehouses and distribution centers under 12,000SF				C			
Warehousing, storage and distribution facilities			S	S		S	P
Water softener service				P			
Wholesaling						S	P
Wrecking yards, as defined in this Code				S			S

PASSED: _____, 2020.

ATTEST: _____

SUSAN CULBERTSON
CLERK OF COUNCIL

_____

DANIEL M. VINCENT
PRESIDENT OF COUNCIL

APPROVED: _____, 2020.

_____

DON MASON
MAYOR

THIS LEGISLATION
APPROVED AS TO FORM

_____

LAW DIRECTOR'S OFFICE