City Council meeting
Agenda of business
May 11, 2020

The Lord's Prayer

Pledge of Allegiance to the flag

Item no.

A. Roll call

B. Approval of minutes of April 27, 2020

C. Communications, reports, and resolutions
None were filed for this meeting

D. Proposed ordinances

1. Ordinance No. 2020-68 – Introduced by Council – An Ordinance authorizing the proper City official to advertise for bids. Award construction contracts, and expend funds for the construction of the Rehabilitate Runway 4/22 Project, Runway 4 Obstruction Removal Project, and the Runway 34 Obstruction Removal Project, and declaring an emergency. (Emergency or First Reading)

2. Ordinance No. 2020-69 – Introduced by Council – An Ordinance authorizing the proper city official to utilize Buchanan Auction Service for the purpose of disposing of surplus city property and declaring an emergency. (Emergency or First Reading)

E. Ordinances for action

3. Ordinance No. 2020-65 – Introduced by Council – An Ordinance authorizing the proper city official to purchase a new 2020 FYDA Freightliner Western Star 4700SB Dump Truck from FYDA Freightliner for the Street Division through the Ohio Department of Transportation Cooperative Purchasing Program. (Second Reading)

4. Ordinance No. 2020-67 – Introduced by Council – An Ordinance amending Chapter 1141.05 Table 15 Permitted and Conditional Uses in Business Districts. (Second Reading)

5. Ordinance No. 2020-14 – Introduced by Council – An Ordinance authorizing the City to enter into Energy Savings Contracts with ABM Technical Solutions, LLC. **(Postponed for 6 months or until the Law Director recommends placement on Council's Agenda-Third Reading)**

6. Ordinance No. 2020-15 – Introduced by Council – An Ordinance authorizing the City to enter into a Tax-Exempt Municipal Lease for the funding of Energy Conservation Measures in the city provided by ABM Technical Solutions, LLC. **(Postponed for 6 months or until the Law Director recommends placement on Council's Agenda-Third Reading)**

F. Traffic orders

None were filed for this meeting

G. Miscellaneous and unfinished business

H. Private petitions and communications

No Non-agenda item petitions were filed for this meeting

Note: Due to the current state of national emergency, from the Covid-19 pandemic, and the need to comply with federal, state and local mandates, and to help prevent the spread of infection, these Council meetings were conducted via teleconference. Council members were on one conference phone with open two-way communications for motions, deliberations, and voting. City Administration was also included on this line for any questions. The public could watch and listen on the Local Cable Access channel 1020 and a second conference phone was provided for the public to call in to listen. This second line could be unmuted if the public petitioned to speak before Council. Y-City News also broadcast the Council meeting on Facebook Live Stream.

Mr. Vincent: Addressing anyone watching, Council is here by conference phone, which you see here in front of me. If you are watching and sound quality is an issue you can also listen in by calling 1-712-770-5505. The access code is 809642. I know that is a lot of numbers. If you have Facebook and you go to the City's Facebook page and those numbers are there also.

PUBLIC HEARING

Mr. Vincent welcomed everyone to the public hearing. For those of you joining on TV we have two members of Council present. With that we have Councilmembers who are tuned in on a conference line. You will be hearing them in a moment when we have roll call. We are here tonight for a public hearing.

A Public Hearing was held at 6:15 p.m., Monday, April 27, 2020 in the City of Zanesville's Council Chambers, 401 Market Street, Zanesville, Ohio to hear a request to amend and revise the zoning map and make permanent zoning in the City of Zanesville, Ohio from the existing zoning district of I-1, Light Industrial to A&E, Agriculture and Estate on Muskingum County Parcel Number 85-36-01-07-000 situated in the City of Zanesville, County of Muskingum, Ohio, and State of Ohio. All testimony for and against will be heard. I will turn it over to Matthew Schley to give us the information.

Matthew Schley: Thanks for having me here, members of Council. Today you are hearing a zoning map amendment. The parcel as he said is 85-36-01-07-000. It is also known as the Lear property. It is a 28.53-acre parcel. It is currently zoned I-1 Industrial. What is being proposed is a zoning map amendment to change it to A&E which is our Agriculture and Estate zoning. A&E is often referred to as a place holder. It is used to preserve large open areas for future urban development. This was presented to the Planning Commission back in March with the recommendation of approval. They found it was consistent with the Comprehensive Plan objectives. The first one is LUG2, which is the City shall take steps to encourage and enhance riverfront areas. This property is adjacent to the Muskingum River so obviously it is a very valuable piece of land and preserving our riverfront areas. LUG3, Brownfield sites must be changed in order to strengthen neighborhoods. This property sits adjacent to a number of residential properties and legal non-conforming residential properties. It is ultimately in the interest to preserve and to change Brownfield sites to have redevelopment and strengthen those neighborhoods. Next LUP3.2 feeds back into our LUG3 which is abandoned

properties are given preference. There hasn't been any development on this site since 2015 or any changes at all. In 1983 this site was added to the National properties list due to ground water contamination. It is essentially a registered brownfield site. The reason behind A&E is a grant to a new property owner of the maximum flexibility for future development, but also grants the City an added layer of control over what type of development could happen there. A&E is a very restricted zoning classification compared to even I-1 which is a fairly restricted zoning classification of itself. What wouldn't be allowed there is another industrial development. This would allow the City to say how we feel that this property could be used for its best use. With that being said, the Planning Commission did recommend this for approval during the regular March 2020 meeting.

Mr. Vincent: Thank you. We will do roll call at the end, my apologies. If you could again refresh us on A&E the and the potential there.

Matthew Schley: Right now, A&E is really designed kind of a two-phase piece. So, the first phase it was used to bring new properties into the City, large pieces of properties like out on Wayne Avenue. A number of those properties are large lots that are zoned A&E and the purpose of that is it is like a land bank, like a banking of the land almost because we can instead of saying this is going to be residential, industrial, or commercial. We say this is going to maintain the same integrity. The other purpose of A&E behind it is to preserve land for future development that has already been developed. So, things like large vacant sites that have been demolished or things of that nature. You can zone that A&E and it will allow you in the future to do lot splits, or redevelop it the way it is so it is better suited for the future than what it is now.

Mr. Vincent: So in the future different zoning may be needed and then you can go the direction that fits.

Mr. Schley: Absolutely. I mean it is a very large parcel, 28.5 acres. I mean you could easily carve that up into any number of our zoning districts. You could make it PUD or a number of things. The goal right now is preserving it and preventing it from becoming another industrial use that could potentially harm the neighborhood and not help it.

Mr. Vincent: Okay, thank you. Are there questions from Council?

Ms. Gildow: Mr. Schley, does this in any way narrow the target market of entities that might be interested in obtaining the Lear site if this runs through the land bank for acquisition by another entity.

Mr. Schley: I would say no. The reason being is that it really just opens it up to whatever a developer would want to do. It certainly limits it in the scope of what somebody could do today. Once this is passed and in order for somebody to do some sort of commercial/residential development of some sort they would have to come back through this process and gain approval. That would allow the City to have a little better control over what could go there. In my opinion, it would be expanding things instead of

limiting them. As it sits right now it is almost stuck perpetually as industrial. This would allow it to become something better and better suited for the future.

Ms. Gildow: That sounds great! Thank you.

Mr. Vincent: With that and I am not sure who it was of Council on the phone. Do you have a question?

Mark Baker: Could you characterize any of the plans that the City has for brownfield mitigation on the site?

Matt Schley: I believe the Mayor would be better suited to answer that question. I can say there has been mitigation. I believe a Phase 1 and a Phase 2 were done on that site. I believe that the Mayor would have a better understanding as to the future plans for that site.

Mayor Mason: Thank you, Matt. Councilman Baker, could I, as I want to make sure I hear your question better. Could you state it again?

Mark Baker: Yes, without going into a whole lot of detail on it. What are the plans the City has for brownfield mitigation which of course would be necessary to develop that area as the city wants it to be developed anyway?

Mayor Mason: I will try to give you a short answer that doesn't give away any legal strategy to outside parties. This site has been reviewed and walked by Ohio EPA, the Ohio Attorney General's office, and other public members from Zanesville government. There are limited areas where there are materials such as asbestos. We have looked at those. There are other areas to the north that actually fall into a Superfund site. I know you didn't ask about a Superfund, but you mentioned brownfield. We believe that could be redefined. By redefine, I mean, soils testing to see what the delineation of that area is, but then subsequently, again I think you know Mark, I would like to have the city take control and start the cleanup. Again, some of it like the asbestos would have to be hand pulled in order to make sure it doesn't scatter into the wind. The asbestos is actually part of the shingles that are attached to that structure that is still there. A lot of times people look at what is on the ground and think they see something there. There might be some foam or things of that nature there, but the asbestos we believe is actually still attached to the structure that is there. Again, some of that is going to have to go to hazardous disposal and the other can go to a construction site. I can talk about more in executive session if you want to.

Mark Baker: Okay, so Mr. Mayor, would there potentially be superfund money from the federal government for such mitigation in the area? I assume there would have to be some sort of certification involved?

Mayor Mason: You are using some terms that I am not sure they go hand in hand. This site has been certified as a Superfund site. EPA and the Attorney General's office

believes it can be redefined in terms of where the hazardous materials still are and subsurface soils contamination. So, that is one thing that can be done. That is to the north. To the south where the structure is, you will see that there is a building there, a relatively good steel structure standing on the back side and I would have to remember; as I am just going from memory, other locations. There is actually like a shingle covering the building and that is what is asbestos. That would need to be disposed of separately. Now, there are brownfield grants available, that cannot be used on superfund sites. So one of the reasons that it is important to clearly redefine or clearly delineate that area that is a superfund is that it frees up additional acreage or the rest of the acreage, to be used as part of brownfields mitigation and alleviation. So, there is a good chance that somewhere around 20 acres of it; maybe a little more or a little less, is subject to brownfields but wouldn't be subject to superfund.

Mark Baker: That is out of how many acres?

Mayor Mason: It is a little over 28 acres. You may ask Bill Arnett.

Mark Baker: Thank you, Mr. Mayor.

Mayor Mason: Bill Arnett is here and he might have additional information that I have missed.

Bill Arnett: Mr. Baker and members of Council, the Mayor is exactly right. It is really odd, but when you have a superfund site you are not able to access U.S. EPA grant dollars to do remediation or cleanup. So, the road that the city has started down with U.S. EPA Region 5 is to try to determine what needs to happen on the site in total to allow us to, like the Mayor said, re-delineate the superfund portion. The superfund portion is just a small percentage of the total site so once it gets delineated and gets pulled apart where part of it is superfund and part of it is not, then you could actually access money from Ohio EPA or U.S. EPA to help with the cleanup. You have to get the superfund designation off the entire site before those dollars become available.

Mark Baker: Perfect, that makes sense. So, it is basically a re-designation of what is and what isn't a superfund site so that money can be used.

Bill Arnett: Correct.

Mayor Mason: I am just guessing based on legislative history that when the United States Congress set up brownfields, I will call them rules in funding. They probably wanted to make sure that went strictly to brownfields because it could stretch a little bit further. If you applied brownfields' money toward superfund sites it would have sucked that pot dry and you would never have money for true brownfields. So, frankly, I think Congress was wise when they created this in basically two separate pots of money so to protect and allow cities like us to go forward on brownfields.

Bill Arnett: I think the other point is that United Technologies (UT) has been working to mediate or to remediate the superfund contamination for probably close to 30 years. They have been pumping water to try to clean this up of soil contamination and the ground water contamination. United Technologies is really the responsible party for U.S. EPA for that brownfield contamination. It doesn't deal with, like the Mayor said like the asbestos on the buildings that have been partially knocked down, but in terms of the ground water and the soil contamination. UT has been working on that for years, for decades.

Mark Baker: Okay, thank you.

Mr. Vincent: Are there any other questions from Council? Do we have anyone from the public on the line? The volume is turned up, correct? Is there anyone from the public to speak for or against this? Is there anyone on the public line that is muted that wants to speak for or against this? I will give you a moment here, last chance. Is there anyone to speak for or against this? Ok, one last call out to Council, is there anyone else from Council? Okay, hearing nothing, we will call this public hearing to a close except we will do a quick roll call so we know who is here on the line.

On the line for the hearing were the following Councilmembers: Sandy Gentry, Todd Ware, Jan Bradshaw, Joey Osborn, Rob Sharrer, Steven Foreman, and Mark Baker.

Ms. Gildow and Mr. Vincent were present in person. Mr. Roberts was absent.

Mr. Vincent: Thank you all very much. Council will resume here at 7:00 p.m. You can tune in for the Council meeting. Thank you very much. This concludes the public hearing.

The hearing concluded about 6:30 p.m.

Susan Culbertson Clerk of Council	Daniel M. Vincent President of Zanesville City Council

ZANESVILLE CITY COUNCIL MEETING – MONDAY, APRIL 27, 2020

The Zanesville City Council met in regular session at 7:00 p.m. on Monday, April 27, 2020 in the City Council Chambers, 401 Market Street, Zanesville, Ohio.

Mr. Vincent: We have several councilmembers joining us by conference call. We will have some challenges, it will slow us down a little bit more. You will hear roll call votes on everything tonight. This arrangement is best for our health safety. Let's get started.

Mr. Vincent: Good evening everyone. I would like to call this meeting to order for Monday, April 27, 2020.

Mr. Vincent led the Lord's Prayer and the Pledge of Allegiance to the Flag.

The following members of Council answered roll call by telephone: Mr. Baker, Mrs. Gentry, Mr. Ware, Miss Bradshaw, Mrs. Osborn, Mr. Sharrer, Mr. Foreman, and Mr. Roberts. Ms. Gildow and Mr. Vincent were in person.

Mr. Vincent: Good, we are all here. So now we will move on to the minutes from March 23, 2020. We didn't have a first meeting in April. With that Council has a public hearing meeting minutes and also our minutes.

APPROVAL OF MINUTES

Mrs. Osborn moved to accept the minutes of March 23, 2020 as printed, seconded by Mr. Roberts. A roll call vote was taken with the following responses by telephone: Mr. Baker, Mrs. Gentry, Mr. Ware, Miss Bradshaw, Mrs. Osborn, Mr. Sharrer, Mr. Foreman, and Mr. Roberts. Ms. Gildow and Mr. Vincent were in person.

Motion carries. Minutes will stand as approved.

COMMUNICATIONS, REPORTS, AND RESOLUTIONS

There were no communications, reports, and resolutions for this meeting.

PROPOSED ORDINANCES

Ordinance No. 2020-59 – Introduced by Council – An Ordinance authorizing the proper city official to dispose of surplus property.

Miss Bradshaw moved for first reading, seconded by Mr. Baker.

Mr. Vincent: This is pretty routine and this does propose challenges as far as these teleconference meetings so with that in mind and this being routine, would someone want to consider waiving?

Ms. Gildow moved to waive the readings and it was seconded by Mr. Roberts.

Mr. Vincent: Is there any discussion on waiving? Like I said, this is pretty routine. We do these Internet auctions all the time to get rid of surplus property. Like I said there are challenges with doing this by teleconference as it slows things way down. I appreciate that. With that we will have roll call vote for waiving of the readings.

Roll call vote on waiving of the readings.
1 Aye in person Ms. Gildow
8 Ayes by telephone
0 Nays

Motion carries.

Miss Bradshaw moved for passage, seconded by Mr. Baker.

Mr. Vincent: Is there any discussion? Hearing none, we will have roll call vote for passage.

Roll call vote for passage.
1 Aye in person Ms. Gildow
8 Ayes by telephone
0 Nays
Motion carries. Ordinance is passed.

Ordinance No. 2020-60 – Introduced by Council – An Ordinance authorizing the proper city official to provide funds to the Transportation Improvement District Board for operational expenses.

Mr. Vincent: This is something we also have done in the past, but we don't do it every year.

Ms. Gildow moved to waive the readings and it was seconded by Miss Bradshaw.

Mr. Vincent: Is there any discussion on waiving? Hearing none, we will have roll call vote for waiving of the readings.

Roll call vote on waiving of the readings.
1 Ayes in person Gildow
8 Ayes by telephone
0 Nays
Motion carries.

Ms. Gildow moved for passage, seconded by Miss Bradshaw.

Roll call vote for passage.
1 Ayes in person Gildow
8 Ayes by telephone
0 Nays
Motion carries. Ordinance is passed.

Ordinance No. 2020-61 – Introduced by Council – An Ordinance authorizing the proper city official to apply to the Ohio Department of Natural Resources for a Natureworks Grant for the Lock #10 Canal Trail Project.

Mr. Vincent: First reading, but we would also entertain to waive. This project has been in the works.

Ms. Gildow moved to waive the readings and it was seconded by Mr. Roberts.

Mr. Vincent: Is there any discussion on waiving? With that we will have roll call vote for waiving of the readings.

Roll call vote on waiving of the readings.
1 Ayes in person Gildow
8 Ayes by telephone
0 Nays
Motion carries.

Miss Bradshaw moved for passage, seconded by Mr. Baker.

Mr. Vincent: Is there any discussion?

Ms. Gildow: May I ask Mr. Arnett if he knows what dollar amount would be the maximum we could hope to get in this grant.

Mr. Arnett: I am going to say $30,000 is the most that we could get for Muskingum County's allocation for this particular grant; but anything would be helpful.

Ms. Gildow: Thank you. $30,000 would help.

Mr. Vincent: Are there any other questions?

Roll call vote for passage.
1 Ayes in person Gildow
8 Ayes by telephone
0 Nays
Motion carries. Ordinance is passed.

Ordinance No. 2020-62 – Introduced by Council – An Ordinance authorizing the proper city official to grant an easement to American Electric Power as part of the construction of the Airport Lighting Vault Improvement Project, and declaring an emergency.

Mr. Vincent: A motion to waive to get passed for the emergency or for first reading, but this is an emergency.

Mr. Baker moved to waive the readings and it was seconded by Mr. Foreman.

Mr. Vincent: Is there any discussion on waiving? With that we will have roll call vote for waiving of the readings.

Roll call vote on waiving of the readings.
1 Ayes in person Gildow
8 Aye by telephone

0 Nays
Motion carries.

Ms. Gildow moved for passage, seconded by Miss Bradshaw.

Mr. Vincent: Is there any further discussion? I think with this is they got into the project they found out they didn't have right of way to get power to the new electric vault that is to be fixed and so Exhibit A as far as the direction they need to go for poles needed to provide power then to this new vault. Are there any questions? Okay.

Roll call vote for passage.
1 Ayes in person Gildow
8 Ayes by telephone
0 Nays
Motion carries. Ordinance is passed.

Ordinance No. 2020-63 – Introduced by Council – An Ordinance authorizing the proper city official to increase the Drinking Water Assistance Fund Loan for the design of Mitchell (Pioneer) Reservoir Replacement Project.

Mr. Vincent: We are at first reading, do we need to move this along Mr. Brown. Would waiving this be helpful?

Scott Brown: Yes, it would be helpful.

Mr. Vincent: Okay.

Mr. Roberts moved to waive the readings and it was seconded by Mr. Baker.

Mr. Vincent: Are there any questions on waiving? We will have discussion with Mr. Brown here shortly. With that we will have roll call vote for waiving of the readings.

Roll call vote on waiving of the readings.
1 Ayes in person Gildow
8 Ayes by telephone
0 Nays
Motion carries.

Miss Bradshaw moved for passage, seconded by Mr. Baker.

Mr. Vincent: Is there any further discussion?

Mayor Mason: I would like to commend both Scott Bryant and Scott Brown for coming up with the concept of reexamining the location of this water facility. The reexamination will save the City over one million dollars and provide better pressure, so I commend both Scott and Scott for their fine work in this area.

Mr. Vincent: Thank you, Mayor. We love to save money.

Mayor Mason: Especially when it is one million.

Mr. Vincent: Mr. Brown, would you like to come up and share anything on this?

Mr. Brown: No, I think the Mayor covered it. Thank you.

Mr. Vincent: We appreciate that. So the increase in cost of preparing this is $45,000, but we are saving $1.1 million dollars from what I am seeing. That is excellent. Okay, are there any questions from Council? Okay, we will have a roll call vote for passage.

Roll call vote for passage.
1 Aye in person Ms. Gildow
8 Ayes by telephone
0 Nays
Motion carries.

Ordinance No. 2020-64 – Introduced by Council – An Ordinance authorizing the proper city official to purchase a new 2021 Freightliner Vactor Truck 114SB Chassis with a Cummins Engine and Allison Transmission from Jack Doheny Company for the Water Division through the State of Ohio Cooperative Purchasing Program.

Mr. Vincent: With that we are at first reading or I would entertain a motion to waive. I know there are some concerns about spending at this time which we will discuss with the Mayor. We need a motion to waive or first reading. What is Council's pleasure?

Mr. Sharrer moved for first reading, seconded by Miss Bradshaw.

Mr. Vincent: Is there any discussion?

Mrs. Osborn: Mr. President, are we discussing waiving or are we discussing the Ordinance?

Mr. Vincent: We are discussing the ordinance right now. It is for first reading. So, it is discussion on the ordinance.

Mrs. Osborn: I was just curious. I know we try to go through the Cooperative Purchasing Program, but did we shop any local vendors that could possibly match it?

Mr. Vincent: With that, I will turn to Mr. Brown. The question here is Councilwoman Osborn is aware this is through the state purchase program which I think is usually the best and very hard to beat. With that, she is questioning whether it has been shopped local or if there are some other options here.

Mr. Brown: This particular unit because it is so specialized there are not a whole lot of companies that make this type of vehicle. There may be a company that is closer than Jack Doheny which is south of Cleveland, so they are in Ohio, but they are a couple of hours away. The State of Ohio gets all of the bid specs and then all of these different companies put in and there is a winner for that year and Jack Doheny was the winner. The water department has spent about eight to nine months scrutinizing all of these different vehicles. They brought in about five different ones. They had to decide whether they were going to use the state purchase or whether or not they wanted to go through the formal bid. They liked the Jack Doheny model the best and it happened to be the winner of the state purchase price so that is how we settled on that one. I honestly am not sure if there is a company that makes vac trucks that is located technically closer to Zanesville than Jack Doheny, but Jack Doheny is within a couple of hours and they are in Ohio.

Mr. Vincent: So you are not sure if anyone local could bid.

Scott Brown: To be honest with you, I am not sure. There is nobody in Zanesville, I know that. There is nobody in Muskingum County that makes this type of vehicle specifically. Whether there is a company within a couple of counties over that is closer than this one, I honestly don't know.

Mr. Vincent: Mrs. Osborn, does that answer your question?

Mrs. Osborn: Yes, thank you.

Mr. Vincent: Are there any other questions from Council?

Mr. Sharrer: I had a quick question on the expenditure of this and the next ordinance. I guess how that fits into the Mayor's memo of kind of watching our dollars right now during this pandemic.

Mr. Vincent: So, turning to the Mayor. I think talking with Rhonda and our local funding here in a month and I will let you go ahead and answer.

Mayor Mason: Rhonda and Scott of course are more free to also address this. We are not using cash outlay for this, Mr. Sharrer, my big concern has been all those items if we were using cash for and Rhonda and I are still watching the numbers. We are looking at the gasoline tax to see if we are going to have enough money for the pavement programs. We are also looking at the fact that there has been a small dip in the water, sewer, and sanitation. I will be curious to see once the moratorium lifts here on May 1 how those numbers respond. Rhonda, do you want to add anything to clarify?

Rhonda Heskett: No, other than the…

Mr. Vincent: Would you come forward just so everyone can hear? This is the Budget and Finance Director Rhonda Heskett.

Rhonda Heskett: Sorry about that. No, I just would like to reiterate what the Mayor said that we had originally intended to purchase this with a cash purchase and now some of the bigger items that we do have laid out for this year we are going to finance to hold onto our cash.

Mr. Vincent: So with this tonight, if Council would decide to waive this and pass it tonight, doesn't mean it has to be purchased right now? I assume you could wait until finance are better and if you find you are concerned that we need to tighten our belt a little bit longer this year that you could hold off on buying this there is not a limit?

Mayor Mason: When I see it from a procedural standpoint, Mr. President, if Council does waive the three readings, we would still have 30 days before the Ordinance became effective unless they declared it an emergency.

Mr. Vincent: Correct.

Mayor Mason: Frankly, we still want to keep watching the numbers. By moving this from being a cash outlay to being financed it would at least alleviate the cash flow issue that I am concerned with. Again, it would be like mortgaging or using a line of credit to put a porch on your house or a new roof on your house instead of using cash. I think that is a good analogy.

Mr. Vincent: Okay, alright. With that, I will ask again, and you do not have to do this Council, because you can do what you want. With that, as far as asking to waive I assume we are going to meet in two weeks by teleconference, but I don't know. Things could get worse. We hope not, but with that just to ask one more time is anyone interested in waiving this and if not it is perfectly fine.

Mr. Roberts moved to waive the readings and it was seconded by Mr. Ware.

Mr. Vincent: Is there any other discussion on waiving? With that we will have roll call vote for waiving of the readings. Waiving overrides the first reading.

Roll call vote on waiving of the readings.
1 Ayes in person Gildow
7 Ayes by telephone
1 Nay - Mr. Sharrer
Motion carries.

Mr. Roberts moved for passage, seconded by Mrs. Gentry.

Mr. Vincent: Is there any further discussion? Hearing none, we will have roll call vote.

Roll call vote for passage.
1 Ayes in person Gildow

8 Ayes by telephone
0 Nays
Motion carries. Ordinance is passed.

Ordinance No. 2020-65 – Introduced by Council – An Ordinance authorizing the proper city official to purchase a new 2020 FYDA Freightliner Western Star 4700SB Dump Truck from FYDA Freightliner for the Street Division through the Ohio Department of Transportation Cooperative Purchasing Program.

Mr. Vincent: We are at first reading or again like the previous one I would ask for a motion to waive if Council so desires.

Ms. Heskett: Mr. President,

Mr. Sharrer moved for first reading, seconded by Mr. Ware.

Ms. Heskett: Thank you. I was just going to ask that the readings on this not be waived because we are going to have to amend it to allow for financing.

Mr. Vincent: Okay, alright. Did everyone hear that? The Finance Director Rhonda Heskett asked for it to not be waived because something needs to be amended on this for financing. So, we are at first reading. Is there any further discussion? Okay, so this is for first reading so a roll call vote for first reading.

Roll call vote for first reading.
1 Aye in person Ms. Gildow
8 Ayes by telephone
0 Nays
Motion carries. This will return to Council at the next meeting probably with amendments for financing.

Ordinance No. 2020-66 – Introduced by Council – An Ordinance authorizing the proper city official to enter into a professional contract with AECOM for Phase 3 Revisions to the City of Zanesville's Combined Sewer Overflow Long Term Control Plan.

Miss Bradshaw moved for first reading, seconded by Ms. Gildow.

Mr. Vincent: Mr. Brown, does this need to move along?

Scott Brown: Yes, Mr. President, the City Engineer sent out an email last week asking if it was possible for the Council to waive the readings on this specific legislation.

Mr. Vincent: The request for waiving is?

Scott Brown: Sure, I understand the question. So, Phase Three is actually the part where we negotiate with the EPA for our next five-year NPDS Permit and Long Term Control Plan.

Dan Vincent: That is coming up in July, I believe.

Scott Brown: Yes.

Mr. Vincent: So it is coming up quickly then. Okay.

Scott Brown: They have already started to work some behind the scenes on it, but we really do need to get this going.

Mr. Vincent: We need to get this passed, waived tonight, and it will be 30 days before it is enacted to speed up the process to give the engineer ability to get the process going to get the information so we can revise the plan to then meet the EPA and hopeful to receive approval of the revised plan.

Scott Brown: That is correct.

Mr. Vincent: Storm water separation

Scott Brown: For the sanitary sewer and storm water separation, yes.

Mr. Vincent: Thank you.

Mr. Roberts moved to waive the readings and it was seconded by Ms. Gildow.

Mr. Vincent: Is there any further discussion on this? Are there any questions from Council? Okay, we will have roll call vote for waiving of the readings.

Roll call vote on waiving of the readings.
1 Ayes in person Ms. Gildow
7 Ayes by telephone
1 Nay Mr. Sharrer
Motion carries.

Mr. Baker moved for passage, seconded by Ms. Gildow.

Is there any further discussion on this? Are there any questions from Council? Okay, we will have roll call vote for passage.

Roll call vote for passage.
1 Ayes in person Gildow
8 Ayes by telephone
Motion carries. Ordinance is passed.

Ordinance No. 2020-67 – Introduced by Council – An Ordinance amending Chapter 1141.05 Table 15 Permitted and Conditional Uses in Business Districts.

Miss Bradshaw moved for first reading, seconded by Mrs. Gentry.

Mr. Vincent: Is there any discussion? With that we have meetings coming up, Mr. Arnett.

Mr. Arnett: The Planning Commission did recommend approving the code changes, but there will be a public hearing coming up before it finally gets to Council for approval.

Mr. Vincent: Do we have the date of that public hearing?

The Clerk responded May 26, Tuesday.

Mr. Arnett: It will be the Tuesday after Memorial Day, May 26th.

Mr. Vincent: So that will be before the third reading. Okay so there will be a public hearing then on this May 26th which is Tuesday because it is the day after Memorial Day and Council will not be in session on Monday, but will be on Tuesday and there will be a public hearing and the time will be announced which is 6:15 p.m.

Hearing none, we will have a roll call vote for first reading.

Roll call vote for passage.
1 Aye in person Ms. Gildow
8 Ayes by telephone
0 Nays
Motion carries.

ORDINANCES FOR ACTION
Ordinance No. 2020-53 - Introduced by Council – An Ordinance authorizing the proper city official to advertise for bids and enter into a contract with the lowest and best bidder for the R6 and R8 through R11 Basin Sewer Separation Project.

Mr. Vincent: With that Council, this is at second reading, but to keep this on timeline we are looking at the second reading at the first meeting of April which we did not have due to the COVID emergency pandemic, so with that asking to waive the readings then to make up for the lost time by not having our meeting the last time.

Ms. Gildow moved to waive the readings and it was seconded by Mr. Baker.

Mr. Vincent: Is there any discussion on waiving? With that we will have roll call vote for waiving of the readings.

Roll call vote on waiving of the readings.
1 Ayes in person Gildow
8 Ayes by telephone
0 Nays Motion carries.

Ms. Gildow moved for passage, seconded by Mr. Foreman.

Mr. Vincent: Is there any further discussion?

Roll call vote for passage.
1 Ayes in person Gildow
8 Ayes by telephone
Motion carries. Ordinance is passed.

Ordinance No. 2020-55 Amended – Introduced by Council – An Ordinance to amend and revise the zoning map and make permanent zoning in the City of Zanesville, Ohio as herein provided.

Mr. Baker moved for second reading, seconded by Mrs. Gentry.

Mr. Vincent: Is there any discussion? With this I know we missed out on a meeting the first of April. Is there a request to waive?

Mr. Baker moved to waive the readings and it was seconded by Miss Bradshaw.

Mr. Vincent: Is there any discussion on waiving? With that we will have roll call vote for waiving of the readings.

Roll call vote to waive the readings.
1 Ayes in person Ms. Gildow
7 Ayes by telephone
1 Nays - Mr. Sharrer
Motion carries.

Miss Bradshaw moved for passage, seconded by Mr. Baker.

Mr. Vincent: Is there any discussion?

Roll call vote for passage.
1 Ayes in person Gildow
8 Ayes by telephone
Motion carries. Ordinance is passed.

Ordinance No. 2020-14 – Introduced by Council – An Ordinance authorizing the City to enter into Energy Savings Contracts with ABM Technical Solutions, LLC.

Mr. Vincent: We have postponed this and the next ordinance several times now, at the request of the Law Director, and we are still working out some issues. I was speaking to the Law Director just prior to this meeting and he felt it was best and his recommendation is to go ahead and postpone this again for six months or unless something has been negotiated and the Law Director recommends it can come back to Council. So, I guess what I am looking for then with this is a motion to postpone this for six months to be October 26, 2020, unless the Law Director says negotiations are moving forward and can come back to Council earlier. Would anyone like to make a motion?

Miss Bradshaw moved to postpone, seconded by Mr. Baker.

Mr. Vincent: Miss Bradshaw first and second by Mr. Baker for that motion to postpone. Is there any further discussion?

Mr. Sharrer: Mr. President, I think we need to have the motion actually spelled out for the six months.

Mr. Vincent: Okay, so the motion was for six months. So, October 26 would be the six-month period unless the Law Director, is that your concern, unless the Law Director says it can come back sooner? Mr. Sharrer, does that work?

Mr. Sharrer: Yes, I just think the motion actually needs to be laid out exactly as the intent is so for the motion to be postponed for six months or until the Law Director negotiates whatever we need done on it.

Mr. Vincent: Okay, so give it to me again, Mr. Sharrer. Postpone for six months and what about the Law Director right before that? I didn't hear what you said.

Mr. Sharrer: I was saying or until the Law Director finishes his negotiations and allows it to come back on to Council's Agenda.

Mr. Vincent: Okay. Is that different than what I said?

Ms. Gildow: You did, but the people making the motions didn't say it, is his point I think.

Mr. Vincent: Okay, so with that Mr. Sharrer you are saying you would actually like to make the motion. I think the use of the word "or", but I think what I said was the same thing.

Mr. Sharrer: All I was saying, Mr. President, is the motion that was put on the floor by Miss Bradshaw did not delineate the six-month timeframe for the postponement. All she made a motion for was a motion to postpone. It didn't have a timeframe on it. I think we need to be clear in what we are motioning.

Mr. Vincent: Okay, so with that Miss Bradshaw, I know what you are saying now Mr. Sharrer. Thank you. I thought you were disagreeing with what the motion that I proposed. So with that,

Miss Bradshaw: That is what I was doing.

Mr. Vincent: So, your motion is to… postpone

Miss Bradshaw: My motion is to postpone for a six-month period or until the Law Director sends it back to Council.

Mr. Vincent: Okay, thank you. With that the second was?

Mr. Baker: I will second again.

Mr. Vincent: Okay, so we have a first and second. Does that sound good to everyone? Mr. Sharrer, does that sound good?

Mr. Sharrer: Yes, thank you.

Mr. Vincent: Sure thing. So, everyone is clear? So, the motion on the floor is to postpone this Ordinance for six months or until the Law Director says it can come back to Council.

Roll call vote for postponing.
1 Aye in person Ms. Gildow
7 Ayes by telephone
1 Nay – Mr. Roberts
Motion carries.

Mr. Vincent: This Ordinance is postponed for six months or until the Law Director sends it back to Council.

Ordinance No. 2020-15 – Introduced by Council – An Ordinance authorizing the City to enter into a Tax-Exempt Municipal Lease for the funding of Energy Conservation Measures in the city provided by ABM Technical Solutions, LLC.

Mr. Vincent: We are at third reading, but asking again as the previous ordinance.

Ms. Gildow moved to postpone for six months until October 26, 2020 or until such time when the Law Director deems appropriate to send back to Council.

Mr. Vincent: Thank you, Ms. Gildow. Is there a second?

Mr. Baker seconded the motion.

Mr. Vincent: Is there any discussion?

Roll call vote for postponing.
1 Aye in person Ms. Gildow
7 Ayes by telephone
1 Nays - Mr. Roberts
Motion carries.

Mr. Vincent: The Ordinance is postponed for six months or until the Law Director recommends it come back to Council. With that, thank you everyone. There are some challenges with the hearing and communications due to teleconference. I think we got where we needed to be so thank you.

Ordinance No. 2020-45 – Introduced by Council - An Ordinance authorizing the proper city official to advertise for bids and enter into a contract for the 2020 Citywide OPWC Overlay with the lowest and best bidder.

Mr. Baker moved for third reading and passage, seconded by Ms. Gildow.

Roll call vote for passage.
1 Aye in person Ms. Gildow
8 Ayes by telephone
0 Nays
Motion carries. Ordinance is passed.

Ordinance No. 2020-47 Amended (2) - Introduced by Council – An Ordinance authorizing the proper city official to commit city funding as a match for an Appalachian Regional Commission Grant for contracting of a GPS Data Collection and GIS mapping Service.

Ms. Gildow moved for third reading and passage, seconded by Mrs. Gentry.

Roll call vote for passage.
1 Aye in person Ms. Gildow
8 Ayes by telephone
0 Nays
Motion carries. Ordinance is passed.

TRAFFIC ORDERS

No traffic orders were filed for this meeting.

MISCELLANEOUS AND UNFINISHED BUSINESS

Mayor Mason: Thank you very much, Mr. President and members of Council. I would be absolutely remiss if I did not thank William Arnett for his service to the City of Zanesville. He is moving on to Appalachian Partnership for Economic Growth. His talents were

recognized in a higher pecuniary amount that we could recognize for his talents. In other words he is getting a pay raise. His responsibilities will be handled by Matt Schley as the Acting CD Director. I have been so happy to work with Bill for all of 100 and some days now and I think we will be in good hands with Matthew. We have been working with Matthew the last week to bring him up to speed on a lot of the projects we are working on and I am very excited to be working with Matthew as I was with William.

Mr. Vincent: Thank you, Mayor. I appreciate it. Mr. Arnett, I have shared with you personally on the phone. You have done a wonderful job. I really appreciate you and I know Council appreciates you. You couldn't have been any easier to work with. You always did your very best and went above and beyond over and over again as far as giving great service to the City of Zanesville, people in the City, and also Council and the Administration. You simply to an excellent job. I am happy for you moving on to a bigger position. I wish you were serving our county with this, but maybe that will change sometime. I do appreciate you very, very much. I am sad to see you go, but very happy for you. Thank you.

William Arnett: Thank you.

PRIVATE PETITIONS AND COMMUNICATIONS

No Non-agenda item petitions were filed for this meeting.

Mr. Vincent: Is there anything else? Is there anything else from Council? Anything from the Administration? Mayor, did you have anything else?

Mayor Mason: The only thing I was going to mention and we sort of covered it earlier is we are doing what we can to, by we, I mean Rhonda, Scott, Doug, and William are doing what we can to watch what our cash outlay will be over the next few days and weeks. The big issues are in everybody's experience is the drop in gasoline sales will lead to a drop in gasoline tax so we will be looking at our resurfacing. We have a project that was bid. It came in well under the engineering amount which it had to, but we haven't awarded yet because we wanted to make sure we had enough cash to cover it. We are paving presently with the 2019 Ohio Public Works Commission funds as you know you just passed an Ordinance for next years. The one being done now is been paid out of money, that was put aside that I think is matched by the state money. So, looking forward to getting some asphalt down. I think it is about $620,000 on this project. We will continue to take a look. I think Rhonda and I will have a better feel for income tax probably in about another week to two weeks to see what our income tax levels are. We are blessed to have several major businesses in the area: Genesis, Spectrum, Halliburton, as each of those have been impacted somewhat economically. We are going to take a look at those revenues on income tax. Again, that will give us a little bit of a feel come June when we reassess our budget ordinance. We did see a drop of revenue of roughly 28% or 29% on water, sewer, sanitation, and refuse because of the moratorium on disconnects. We will see if that bounces back and recaptures some of those lost revenues. Ultimately it should; it is just a matter of when. So that is why we are watching the cash. We should regain most of our water, sewer, and utilities;

you will probably never regain the income tax. That is a permanent dent. Gas Tax is also a permanent dent. We won't regain that.

On the bright side, I do know the state is pushing some of their projects out into various quarters into other fiscal years. So, if we are bidding projects that might mean it could be a buyers' market versus a sellers' market because we will be having people bid in with less competition from state contracts. So, that might be something we consider if we do in fact reject the bids on our resurfacing, which was a $420,000 engineer's estimate, and try to rebid because if the state of Ohio isn't bidding we are not competing against them which means we get a better bid. So, we are looking at all of these things trying to keep the big picture, but make sure we take care of the important details.

Mr. Vincent: Thank you, Mayor. Are there any questions from Council? Before we adjourn, I would like to say a special thank you to Y-City News who is live streaming this tonight to help us out. We are also streaming this to the cable access channel. If you are having discoloration that is an issue we are having internally. I hope it is worked out and hope to have it fixed the next time. So, it is not your TV set. I would like to thank Lisa Hittle who is our IT Director here at the City. She has done many wonderful and amazing things to make this happen tonight with two conference lines and running the camera for us. We do appreciate that. Thank you all for being here. We have our masks here and we will mask back up before we leave. The Mayor has his mask ready to go. If there is nothing else from Council, I will entertain a motion to adjourn.

Ms. Gildow moved to adjourn. It was seconded by Mrs. Osborn. A voice vote was taken with all being in favor. Motion carries.

Mr. Vincent: Thank you everyone. Have a good evening, stay home, and stay safe. Thank you and good night.

The meeting ended about 7:55 p.m.

Susan Culbertson Clerk of Council	Daniel M. Vincent President of Zanesville City Council

Public Service Committee
Andrew Roberts, Chair

ORDINANCE NO. 2020 - 68
INTRODUCED BY COUNCIL

AN ORDINANCE AUTHORIZING THE PROPER CITY OFFICIAL TO ADVERTISE FOR BIDS, AWARD CONSTRUCTION CONTRACTS, AND EXPEND FUNDS FOR THE CONSTRUCTION OF THE REHABILITATE RUNWAY 4/22 PROJECT, RUNWAY 4 OBSTRUCTION REMOVAL PROJECT, AND THE RUNWAY 34 OBSTRUCTION REMOVAL PROJECT, AND DECLARING AN EMERGENCY.

WHEREAS, the City is applying for FY 20 grant funding from the Federal Aviation Administration (FAA) for the Rehabilitate Runway 4/22 Project, the Runway 4 Obstruction Removal Project, and the Runway 34 Obstruction Removal Project; and

WHEREAS, Crawford, Murphy and Tilly, Inc. has designed said projects in anticipation of award of funds from the FAA, and has determined the estimated cost of each project to be as follows; and

- Rehabilitate Runway 4/22 Project $25,000
- Runway 4 Obstruction Removal Project $30,000
- Runway 34 Obstruction Removal Project $75,000

WHEREAS, the FAA is requiring bids and grant submittal by June 15, 2020, and the actual bid must accompany the grant submittal, therefore this ordinance needs passage as an emergency. Failure to secure grant funding from the FAA for this project could result in further delay of the projects and further deterioration of the existing Airport facilities, potentially creating a health and safety hazard for those that utilize the Airport.

NOW, THEREFORE, BE IT ORDAINED, by the Council of the City of Zanesville, State of Ohio, that:

SECTION ONE: The proper City official is hereby authorized to advertise for bids, award construction contracts, and expend funds in an estimated total amount of $130,000.00 for the construction of the Rehabilitate Runway 4/22 Project, the Runway 4 Obstruction Removal Project, and the Runway 34 Obstruction Removal Project. The funds shall be paid from City Line Item 615.6415.54413, with the FAA contributing 90% Airport Improvement Program (AIP) funding and 10% CARES Act funding.

SECTION TWO: For the reasons stated above, this Ordinance is declared to be an emergency measure. Provided it receives the affirmative vote of six (6) or more members of City Council, this Ordinance shall take effect and be in force immediately upon its passage and approval of the Mayor. Otherwise, it shall take effect and be in force from and after the earliest period allowed by law.

PASSED: _____, 2020

Ordinance No. 2020-68

ATTEST: _____
Susan Culbertson
Clerk of Council

_____
Daniel M. Vincent
President of Council

APPROVED:_____, 2020

THIS LEGISLATION APPROVED AS TO FORM

_____
Donald Mason, Mayor

_____
Law Director's Office

ORDINANCE NO. 2020-69
INTRODUCED BY COUNCIL

AN ORDINANCE AUTHORIZING THE PROPER CITY OFFICIAL TO UTILIZE BUCHANAN AUCTION SERVICE FOR THE PURPOSE OF DISPOSING OF SURPLUS CITY PROPERTY AND DECLARING AN EMERGENCY

WHEREAS, the City of Zanesville has surplus vehicles and equipment being stored and in need of disposal, as shown in Attachment A; and

WHEREAS, to expediently sell the unused property, the City received quotes from three local auction services, and Buchanan Auction Service submitted the lowest quote to provide such service, as shown in Attachment B; and

WHEREAS, auctioning of used equipment is allowable under Section 721.15 of the Ohio Revised Code, requiring similar public notification of advertisements for bid for sale of such property; and

WHEREAS, the current storage facility is almost at capacity, so if this Ordinance is not passed as an emergency it is likely that these vehicles and equipment will be stored in an unsecure location thereby inviting theft, vandalism, or other crimes which would be detrimental to the health, safety and welfare of the community.

NOW, THEREFORE, BE IT ORDAINED by the Council of the City of Zanesville, State of Ohio, that:

SECTION ONE: The proper city official is hereby authorized to utilize Buchanan Auction Service to hold an auction for the disposal of unused City equipment.

SECTION TWO: That all items to be disposed of will be sold to the highest and best bid.

SECTION THREE: That Buchanan Auction Service shall receive 3% of the gross sales for conducting the auction.

SECTION FOUR: For the reasons stated in the preamble hereto, this Ordinance is declared to be an emergency measure. Provided it receives the affirmative vote of six (6) or more members of City Council, this Ordinance shall take effect and be in force immediately upon its passage and approval of the Mayor. Otherwise, it shall take effect and be in force from and after the earliest period allowed by law.

PASSED: _____,2020

ATTEST:

SUSAN CULBERTSON
CLERK OF COUNCIL

DANIEL M. VINCENT
PRESIDENT OF COUNCIL

APPROVED: _____, **2020**

DONALD MASON
MAYOR

THIS LEGISLATION APPROVED AS TO FORM

LAW DIRECTOR'S OFFICE

Attachment A

Inventory of Vehicles - May 05, 2020

No.	Year	Make	Model	Vehicle Identification Number	Department	Add'l Comments
1	2000	Cadillac	Deville	1G6KD54Y5YU208523	Police	Salvage Title - Central Avenue
2	2001	Ford	Taurus	1FAFP55U61G188942	Police	Salvage Title - Central Avenue
3	1997	Buick	Century	2G4WS52M8V1477333	Police	Forfeiture to be Sold - Central Avenue
4	2003	Ford	Taurus	1FAFP55S63G159118	Police	Salvage Title - Central Avenue
5	1983	Suzuki	GS8550G	JS1GS72G2D2100682	Police	Salvage Title - Central Avenue
6	2014	Dodge	Charger	2C3CDXBG6EH158953	Police	Forfeiture to be Sold - Central Avenue
7	2015	Chevrolet	Malibu	1G11B5SL2FF200170	Police	Forfeiture to be Sold - Central Avenue
8	2005	Mercedes	C	WDBRF40J25A654441	Police	Forfeiture to be Sold - Central Avenue
9	1993	Ford	Mustang	1FACP41M0PF195287	Police	Salvage Title - Central Avenue
10	2001	Toyota	Tundra	5TBRT341X1S171638	Police	Salvage Title - Central Avenue
11	2001	Mitsubishi	Eclipse	4A3AC34G21E043552	Police	Salvage Title - Central Avenue
12	1999	Honda	Accord	1HGCG2258XA008169	Police	Salvage Title - Central Avenue
13	1998	Ford	Taurus	1FAFP52U9WG159267	Police	Salvage Title - Central Avenue
14	2003	Ford	Taurus	1FAFP55U73A254212	Police	Salvage Title - Central Avenue
15	2003	Ford	Focus	3FAFP37343R176342	Police	Salvage Title - Central Avenue
16	2003	Ford	Focus	1FAFP36373W156634	Police	Salvage Title - Central Avenue
17	2007	Ford	F-150	1FTRX14WX7FA70085	Police	Forfeiture to be Sold - Central Avenue
18	2000	Mitsubishi	Montero	JA4MT41R3YP054483	Police	Salvage Title - Central Avenue
19	2005	Dodge	Caravan	1D4GP24R65B36R829	Police	Salvage Title - Central Avenue
20	1994	Ford	F-150	1FTEF15N3RNB17912	Police	Salvage Title - Central Avenue
21	2005	Suzuki	LTF	5SAAK46A57101338	Police	Salvage Title - Annex Garage
22	2003	Chevrolet	Cavalier	1G1JC12F337227514	Police	Salvage Title - Central Avenue
23	2006	Chrysler	T&C Van	1A4GP45R56B557096	Police	Forfeiture to be Sold - Central Avenue
24	2005	Ford	Focus	1FAFP34N35W293559	Police	Salvage Title - Central Avenue
25	2000	Toyota	Tacoma	4TAPM62N4Y2654016	Police	Salvage Title - Central Avenue
26	2000	Chevrolet	Silverado	1GCEK14T9YE186971	Police	Salvage Title - Central Avenue
27	1994	Toyota	Corolla	2T1AE09B8RC049122	Police	Salvage Title - Central Avenue

28	2007	Honda	Civic	JHMFA36267S013656	Police	Salvage Title - Central Avenue
29	2008	Suzuki	Forenza	KL5JD56Z68K804904	Police	Salvage Title - Central Avenue
30	2002	Volkswagon	Jetta	3VWVH69M52M175686	Police	Salvage Title - Central Avenue
31	1998	Chevrolet	Monte Carlo	2G1WW12M1W9117267	Police	Salvage Title - Central Avenue
32	2000	Ford	Focus	1FAFP363XYW118760	Police	Salvage Title - Central Avenue
33	2001	Chrysler	Sebring	1C3EL55U41N653199	Police	Salvage Title - Central Avenue
34	1998	Ford	Taurus	1FAFP52U9WA234004	Police	Salvage Title - Central Avenue
35	2006	Ford	Fusion	1FAFP08176R121772	Police	Salvage Title - Central Avenue
36	2008	Jeep	Laredo	1J8GR48K68C194411	Police	Forfeiture to be Sold - Central Avenue
37	2008	Honda	Accord	1HGCP26858A079321	Police	Salvage Title - Harris Road
38	1992	Ford	Ranger	1FTDF15N0NLA15565	Police	Clear Title - Harris Road
39	1998	Dodge	Durango	1B4HS28Y7WF225456	Police	Clear Title - Harris Road
40	2008	Dodge	Avenger	1B3LC56R48N625332	Police	Salvage Title - Harris Road
41	1993	Chrysler	Lebaron	3C3XA5636PT517508	Police	Clear Title - Harris Road
42	2007	Chrysler	T&C Van	2A4GP54L57R125713	Police	Salvage Title - Harris Road
43	2001	Honda	Accord	1HGCG32531A006309	Police	Salvage Title - Harris Road
44	2006	Pontiac	Montana	1GMDV33L16D138427	Police	Salvage Title - Harris Road
45	1999	Toyota	Rav4	JT3GP10V2X7050237	Police	Salvage Title - Harris Road
46	1996	Jeep	Cherokee	1J4GZ58S4TC230015	Police	Salvage Title - Harris Road
47	1997	Mercury	Marquis	2MELM75W6VX622729	Police	Salvage Title - Harris Road
48	2003	Chevrolet	Malibu	1G1NE52J93M639980	Police	Salvage Title - Harris Road
49	2004	Pontiac	Grand Am	1G2NF52E84M664009	Police	Salvage Title - Harris Road
50	2007	Chevrolet	HHR	3GNDA13D27S562253	Police	Salvage Title - Harris Road
51	1996	Volkswagon	Passat	WVWGC83A7TE064164	Police	Salvage Title - Harris Road
52	2006	Buick	Rendezvous	3G5DA03L26S529835	Police	Salvage Title - Harris Road
53	2000	Chevrolet	Impala	2G1WH55K5Y9345660	Police	Salvage Title - Harris Road
54	1998	Nissan	Frontier	1N6DD26Y4WC330999	Police	Salvage Title - Harris Road
55	2013	Ford	Fiesta	3FADP4EJ0DM178439	Police	Salvage Title - Harris Road
56	1965	Chevrolet	FLE	C1545N132618	Police	Salvage Title - Harris Road
57	2008	Dodge	Caliber	1B3HB28B28D560607	Police	Salvage Title - Harris Road
58	1996	Dodge	Ram Van	2B6HB21X9TK159837	Police	Salvage Title - Harris Road
59	1994	GMC	Truck	1GTEK14Z4RZ545495	Police	Salvage Title - Harris Road
60	2002	Chevrolet	Malibu	1G1ND52J92M552209	Police	Salvage Title - Harris Road
61	2012	Ford	Focus	1FAHP3F25CL402887	Police	Salvage Title - Harris Road

62	2002	Dodge	Caravan	1B4GP45362B693553	Police	Clear Title - Harris Road
63	2012	Ford	Focus	1FAHP3F20CL381575	Police	Salvage Title - Harris Road
64	2001	Nissan	Altima	1N4DL01A71C186612	Police	Salvage Title - Harris Road
65	1998	Ford	F-150	1FTZF1725WNB30368	Police	Salvage Title - Harris Road
66	1999	Ford	Expedition	1FMPU18L4XLA72413	Police	Salvage Title - Harris Road
67	1996	Chevrolet	Blazer	1GNDT13W9T2131068	Police	Salvage Title - Harris Road
68	1998	Chevrolet	Cavalier	1G1JF52T5W7130257	Police	Salvage Title - Harris Road
69	2001	Pontiac	Bonneville	1G2HY54K314254823	Police	Clear Title - Harris road
70	2004	Chevrolet	Blazer	1GNDT13S942340986	Police	Salvage Title - Harris Road
71	1999	Chevrolet	Malibu	1G1ND52T4XY136067	Police	Salvage Title - Harris Road
72	2010	Chevrolet	Malibu	1G1ZB5EB4A4117625	Police	Salvage Title - Harris Road
73	1999	GMC	Sierra	1GTGK29U0XE524112	Police	Clear Title - Harris Road
74	2001	Ford	F-350	1FTSW31F51EA57391	Police	Salvage Title - Harris Road
75	2003	Chrysler	T&C Van	2C4GP44313R213328	Police	Salvage Title - Harris Road
76	2003	Honda	Civic	1HGES165X3L032841	Police	Salvage Title - Harris Road
77	2006	Nissan	Murano	JN8AZ08W66W526288	Police	Salvage Title - Harris Road
78	1998	Ford	Explorer	1FMYU22E2WUC07207	Police	Salvage Title - Harris Road
79	2002	Dodge	Caravan	1B4GP34352B561718	Police	Salvage Title - Harris Road
80	2004	Chrysler	HHR	3C4FY48844T319362	Police	Salvage Title - Harris Road
81	1994	Chevrolet	Astro Van	1GNDM19Z2RB114524	Police	Salvage Title - Harris Road
82	2001	Pontiac	Grand Am	1G2NF52E11M591948	Police	Salvage Title - Harris Road
83	2003	Chevrolet	Cavalier	1G1JC52F337346672	Police	Salvage Title - Harris Road
84	2003	Oldsmobile	Alero	1G3NL12E33C104691	Police	Salvage Title - Harris Road
85	2001	Ford	Escape	1FMYU02171KA76832	Police	Salvage Title - Harris Road
86	2001	Ford	Taurus	1FAFP55U91G214336	Police	Salvage Title - Harris Road
87	1998	Jeep	Cherokee	1J4GZ58S74WC284025	Police	Clear Title - Harris Road
88	2003	Mitsubishi	Eclipse	4A3AE45G33E016457	Police	Clear Title - Harris Road
89	2003	Ford	F-350	1FTSW31P73EC25673	Police	Salvage Title - Harris Road
90	2008	Mazda	M3	JM1BK32F5281822441	Police	Clear Title - Harris Road
91	2006	Chevrolet	Impala	2G1WT58K869209188	Police	Salvage Title - Harris Road
92	1998	Honda	Civic	1HGEJ6676WL012771	Police	Salvage Title - Harris Road
93	2002	Chevrolet	Malibu	1G1ND52JX2M660659	Police	Salvage Title - Harris Road
94	1999	Dodge	Avenger	4B3AU42N1XE012194	Police	Salvage Title - Harris Road
95	1994	Oldsmobile	Cutlass	1G3AG55M3R6406177	Police	Salvage Title - Harris Road

96	1994	Chevrolet	S14	1GCCS14Z6RK102538	Police	Salvage Title - Harris Road
97	1998	Honda	Accord	1HGC1658WA074577	Police	Salvage Title - Harris Road
98	1998	Chevrolet	Blazer	1GNCT18W0WK234646	Police	Salvage Title - Harris Road
99	1993	Saturn	SL2	1G8ZJ5573PZ334109	Police	Salvage Title - Harris Road
100	2002	Honda	Odyssey	2HKRL18602H565206	Police	Salvage Title - Harris Road
101	2013	Audi	Q5	WA1CFB90DA032324	Police	Salvage Title - Harris Road
102	1984	Cadillac	El Dorado	1G6AL5780EE666230	Police	Salvage Title - Harris Road
103	1993	Jeep	Cherokee	1J4GZ58Y7PC529542	Police	Salvage Title - Harris Road
104	1978	Lincoln	Town Coupe	8Y81S909676	Police	Salvage Title - Harris Road
105	2002	Ford	Ranger	1FTZR45EX2TA27040	Police	Salvage Title - Harris Road
106	2004	Honda	CRV	JHLRD78474C023004	Police	Salvage Title - Harris Road
107	2003	Cadillac	CTS	1G6DM57N530111090	Police	Salvage Title - Harris Road
108	2004	Chevrolet	Malibu	1G1ZT54844F168554	Police	Salvage Title - Harris Road

Inventory of Property - May 5, 2020

No.	Make/Model	Description	Dept.
		TOOLS	
1	Stihl 023	Chainsaw	Police
2	Stihl 506	Weedeater	Police
3	Weedeater	Blower	Police
4	Eager Beaver	Gas Blower	Police
5	Toro	Blower	Police
6	Homelite	Chainsaw	Police
7	2 - Husqvarna 450e	Chainsaw	Police
8	Toro	Snowblower	Police
9	Ryobi	Weedeater	Police
10		2 - Portable Air Tank	Police
11		Small Band Saw	Police
12	Rigid	Miter Saw	Police
13	Craftsman	Router	Police
14	Black N Decker	Rotary Saw in case	Police
15	Milwaukee	Sawzall in case	Police

16	Black N Decker	Cordless Weedeater	Police
17		Scroll Saw	Police
18	Black N Decker	Drill in case	Police
19	Black N Decker	Corded Drill	Police
20		Circular Saw	Police
21	Titan	Heat gun	Police
22	Craftsman	Hot glue gun	Police
23	Hyper Touch	113 piece tool set	Police
24	Craftsman	4 Tool combo kit	Police
25	Grasshog	Weedeater Dash Cam Pro	Police
26	Craftsman	Laser Level	Police
27	Craftsman	Easy Fix	Police
28	Craftsman	Level	Police
29	Steelman	Impact wrench	Police
30		Air Nailer	Police
31		3 - Boxes of Nails	Police
32		Paint Sprayer	Police
33	Porter Cable	Cordless Drills and charger in case	Police
34	Pittsburgh	Socket set	Police
35		Milwaukee bag w/ Misc. cordless tools	Police
36		Kobalt tool bag w/ Misc. tools	Police
37		Box of Misc. tools	Police
38		Husky tool bag w/ Misc. hand tools	Police
39		Stanley tool box w/ Misc Stanley tools	Police
40		Blue tote of Misc. hand tools	Police
41		Pick Axe	Police
42		2 - Propane Tanks	Police
43		Trash pump	Police
44		Set of open end and ratcheting wrenches/gear wrench	
45		Real Tree camo metal tool box w/ Misc hand tools	Police
46		Tractor Supply metal truck bed tool box	Police
47		2 - red tool boxes	Police
48		Bucket w/ Misc tools	Police
49		Battery Tester	Police

50		Red tool box w/ Misc. tools	Police
51		Small socket set	Police
52		Misc. tools in box	Police
53		Mattock	Police
54		2 Boxes of truck steps	Police

Misc.

55		Small gun safe	Police
56		Tree stand	Police
57		Military bag w/ Misc. items	Police
58		Fishing poles and tackle box	Police
59		Fish Finder	Police
60	Summit 150	Cross Bow	Police
61		Cross Bow and arrows	Police
62		Bow case	Police
63		Wooden Ammo box	Police
64		Set of Nike/Taylor made golf clubs	Police
65	Honda	3-wheeler - no title/does not run	Police
66	Dingo	Go Kart	Police
67	Baja	90cc Mini Bike	Police
68		2- Bicycles	Police
69		Coin Book - Lincoln Head coins	Police
70	Sony	Stereo and 5CD changer	Police
71	Vizio	Flat screen TV	Police
72	Magnavox	15" LCD TV	Police
73		Box of Misc. Hand gun magazines	Police
74		Box of BB pellets and several CO2 cartridges	Police
75		Box of Misc. Swords	Police
76		Box of Misc. folding and pocket knives	Police
77		Tote of Misc. pottery pieces and Leaded Glass Light	Police
78		Box of Misc. Sports Memorabilia	Police
79		Basket of Misc. Household Décor	Police
80		Michael Kors purse new w/ tags	Police
81		2 - New brand name purses w/ tags	Police

82	Jewelry Box w/ Numerous pieces Misc. jewelry	Police
83	Box of mens/womens watches some new in boxes	Police
84	Purple gymbag of 30 pair Victoria Secret/Pink brand underwear size small/medium all new with tags	Police
85	Large tote of Misc. Vinyl Records	Police
86	Backpack of Pokemon cards	Police
87	Side by Side stroller	Police
88	V-Tech Innotab3 game system	Police
89	6 large and 1 small grow lights	Police
90	3 - Air purifiers/air filters	Police
91	Grow pots and duct work/plant stakes/irrigation containers	Police

Attachment B

INFORMAL PROPOSAL FORM

ITEM(S) TO BE PURCHASED: Auction of Surplus/Unclaimed Property and Vehicle(s)

DEPARTMENT: Public Safety - Police Department

VENDOR	QUOTE DUE	YARDS	PRICE
1. Buchanan Auction Service	—	—	3% of gross
2. Andy's Auction Service	—	—	10% of gross
3. Koehler's Auction Service	—	—	15% of gross

ADDITIONAL INFORMATION/REASON FOR NOT ACCEPTING LOWEST BID: _____

DIVISION HEAD SIGNATURE: _____

DATE: _____

Public Service Committee
Andrew Roberts, Chair

Proposed Amendment

ORDINANCE NO. 2020 – 65A
INTRODUCED BY COUNCIL

AN ORDINANCE AUTHORIZING THE PROPER CITY OFFICIAL TO PURCHASE A NEW 2020 FYDA FREIGHTLINER WESTERN STAR 4700SB DUMP TRUCK FROM FYDA FREIGHTLINER FOR THE STREET DIVISION THROUGH THE OHIO DEPARTMENT OF TRANSPORTATION COOPERATIVE PURCHASING PROGRAM.

WHEREAS, the City staff has examined the current condition of the Street Division's heavy equipment and has determined that an existing dump truck with snow plow has exceeded its useful life expectancy and must be replaced; and

WHEREAS, Capital monies were appropriated for equipment purchases within the FY 2020 City Budget.

NOW, THEREFORE, BE IT ORDAINED by the Council of the City of Zanesville, State of Ohio, that:

SECTION 1: The proper City official is hereby authorized to purchase ~~of~~ or finance a new 2020 Fyda Freightliner Western Star 4700SB dump truck with snow plow from Fyda Freightliner for the Street Division through the Ohio Department of Transportation Cooperative Purchasing Program, Contract #023-20.

SECTION 2: The cost for this new dump truck is estimated to be $147,217.00, and shall be paid from line item number 202-6541-54448.

SECTION 3: This Ordinance shall take effect upon the approval of the Mayor and from and after the earliest period allowed by law.

PASSED: _____, 2020

ATTEST: _____
SUSAN CULBERTSON,
Clerk of Council

_____
DANIEL M. VINCENT,
President of Council

APPROVED: _____, 2020

_____
DONALD MASON,
Mayor

THIS LEGISLATION APPROVED AS TO FORM

_____
LAW DIRECTOR'S OFFICE

Public Service Committee
Andrew Roberts, Chair

ORDINANCE NO. 2020 - 65
INTRODUCED BY COUNCIL

AN ORDINANCE AUTHORIZING THE PROPER CITY OFFICIAL TO PURCHASE A NEW 2020 FYDA FREIGHTLINER WESTERN STAR 4700SB DUMP TRUCK FROM FYDA FREIGHTLINER FOR THE STREET DIVISION THROUGH THE OHIO DEPARTMENT OF TRANSPORTATION COOPERATIVE PURCHASING PROGRAM.

WHEREAS, the City staff has examined the current condition of the Street Division's heavy equipment and has determined that an existing dump truck with snow plow has exceeded its useful life expectancy and must be replaced; and

WHEREAS, Capital monies were appropriated for equipment purchases within the FY 2020 City Budget.

NOW, THEREFORE, BE IT ORDAINED by the Council of the City of Zanesville, State of Ohio, that:

SECTION 1: The proper City official is hereby authorized the purchase of a new 2020 Fyda Freightliner Western Star 4700SB dump truck with snow plow from Fyda Freightliner for the Street Division through the Ohio Department of Transportation Cooperative Purchasing Program, Contract #023-20.

SECTION 2: The cost for this new dump truck is estimated to be $147,217.00, and shall be paid from line item number 202-6541-54448.

SECTION 3: This Ordinance shall take effect upon the approval of the Mayor and from and after the earliest period allowed by law.

PASSED: _____, 2020

ATTEST:

SUSAN CULBERTSON,
Clerk of Council

DANIEL M. VINCENT,
President of Council

APPROVED: _____, 2020

DONALD MASON,
Mayor

THIS LEGISLATION APPROVED AS TO FORM

LAW DIRECTOR'S OFFICE

Prepared for:
Bill Rosser
OH City of Zanesville
1084 Central Ave
Zanesville, OH 43701
Phone: 740-819-8937

Prepared by:
Dustin Schwartzenberger
FYDA FREIGHTLINER
WESTERN STAR ZANESVILLE
5005 EAST PIKE
ZANESVILLE, OH 43701
Phone:

Attachment to Ordinance 2020-65
A proposal for
OH City of Zanesville
ODOT CO-OP #023-20 State Bid
Prepared by
FYDA FREIGHTLINER WESTERN STAR ZANESVILLE
Dustin Schwartzenberger

Feb 13, 2020

Western Star 4700SB

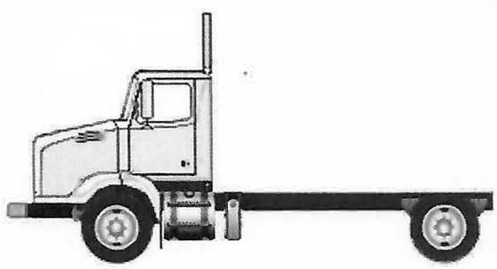

Components shown may not reflect all spec'd options and are not to scale

Prepared for:
Bill Rosser
OH City of Zanesville
1084 Central Ave
Zanesville, OH 43701
Phone: 740-819-8937

Prepared by:
Dustin Schwartzenberger
FYDA FREIGHTLINER
WESTERN STAR ZANESVILLE
5005 EAST PIKE
ZANESVILLE, OH 43701
Phone:

Attachment to Ordinance 2020-65

SPECIFICATION PROPOSAL

Data Code	Description	Weight Front	Weight Rear
Price Level			
PRL-20T	WESTERN STAR 4700 PRL-20T (EFF:04/30/19)		
Data Version			
DRL-003	SPECPRO21 DATA RELEASE VER 003		
Vehicle Configuration			
001-451	4700 SET-BACK FRONT AXLE CHASSIS	9,215	6,480
004-221	2021 MODEL YEAR SPECIFIED		
002-004	SET BACK AXLE - TRUCK		
019-004	STRAIGHT TRUCK PROVISION, NON-TOWING		
003-001	LH PRIMARY STEERING LOCATION		
General Service			
AA1-002	TRUCK CONFIGURATION		
AA6-001	DOMICILED, USA 50 STATES (INCLUDING CALIFORNIA AND CARB OPT-IN STATES)		
A85-011	CONSTRUCTION SERVICE		
A84-1GM	GOVERNMENT BUSINESS SEGMENT		
AA4-010	DIRT/SAND/ROCK COMMODITY		
AA5-002	TERRAIN/DUTY: 100% (ALL) OF THE TIME, IN TRANSIT, IS SPENT ON PAVED ROADS		
AB1-008	MAXIMUM 8% EXPECTED GRADE		
AB5-001	SMOOTH CONCRETE OR ASPHALT PAVEMENT - MOST SEVERE IN-TRANSIT (BETWEEN SITES) ROAD SURFACE		
995-1A5	WESTERN STAR VOCATIONAL WARRANTY		
A66-99D	EXPECTED FRONT AXLE(S) LOAD : 14700.0 lbs		
A68-99D	EXPECTED REAR DRIVE AXLE(S) LOAD : 23000.0 lbs		
A63-99D	EXPECTED GROSS VEHICLE WEIGHT CAPACITY : 37700.0 lbs		
Truck Service			
AA3-018	FRONT PLOW/END DUMP BODY		

Prepared for:
Bill Rosser
OH City of Zanesville
1084 Central Ave
Zanesville, OH 43701
Phone: 740-819-8937

Prepared by:
Dustin Schwartzenberger
FYDA FREIGHTLINER
WESTERN STAR ZANESVILLE
5005 EAST PIKE
ZANESVILLE, OH 43701
Phone:

Data Code	Description	Weight Front	Weight Rear
Engine			
101-22R	CUM L9 330 HP @ 2000 RPM, 2200 GOV RPM, 1000 LB/FT @ 1400 RPM	-850	-70
Electronic Parameters			
79A-075	75 MPH ROAD SPEED LIMIT		
79B-000	CRUISE CONTROL SPEED LIMIT SAME AS ROAD SPEED LIMIT		
79K-002	PTO MODE ENGINE RPM LIMIT - 700 RPM		
79L-001	PTO MODE THROTTLE OVERRIDE - LIMIT TO 800 RPM		
79M-001	PTO MODE BRAKE OVERRIDE - SERVICE BRAKE APPLIED		
79P-002	PTO RPM WITH CRUISE SET SWITCH - 700 RPM		
79Q-002	PTO RPM WITH CRUISE RESUME SWITCH - 700 RPM		
79S-008	PTO MODE CANCEL VEHICLE SPEED - 25 MPH		
79U-007	PTO GOVERNOR RAMP RATE - 250 RPM PER SECOND		
79V-001	FUEL DOSING OF AFTERTREATMENT ENABLED IN PTO MODE-CLEANS HYDROCARBONS AT HIGH TEMPERATURES ONLY		
80G-002	PTO MINIMUM RPM - 700		
80J-002	REGEN INHIBIT SPEED THRESHOLD - 5 MPH		
Engine Equipment			
99C-017	2016-2019 ONBOARD DIAGNOSTICS/2010 EPA/CARB/FINAL GHG17 CONFIGURATION		
99D-011	2008 CARB EMISSION CERTIFICATION - CLEAN IDLE (INCLUDES 6X4 INCH LABEL ON LOWER FORWARD CORNER OF DRIVER DOOR)		
13E-001	STANDARD OIL PAN		
105-001	ENGINE MOUNTED OIL CHECK AND FILL		
133-004	ONE PIECE VALVE COVER		
014-108	SIDE OF HOOD AIR INTAKE WITH FIREWALL MOUNTED DONALDSON AIR CLEANER WITH Safety ELEMENT AND INSIDE/OUTSIDE AIR WITH SNOW DOOR	10	
124-1D7	DR 12V 160 AMP 28-SI QUADRAMOUNT PAD ALTERNATOR WITH REMOTE BATTERY VOLT SENSE		
292-216	(3) DTNA GENUINE, AGM STARTING AND CYCLING, MIN 2190CCA, 570RC, THREADED STUD BATTERIES		

Prepared for:
Bill Rosser
OH City of Zanesville
1084 Central Ave
Zanesville, OH 43701
Phone: 740-819-8937

Prepared by:
Dustin Schwartzenberger
FYDA FREIGHTLINER
WESTERN STAR ZANESVILLE
5005 EAST PIKE
ZANESVILLE, OH 43701
Phone:

Data Code	Description	Weight Front	Weight Rear
290-1AC	PASSENGER SEAT BATTERY BOX VENTED TO OUTSIDE OF CAB		
282-013	BATTERY BOX MOUNTED UNDER PASSENGER SEAT		
291-017	WIRE GROUND RETURN FOR BATTERY CABLES WITH ADDITIONAL FRAME GROUND RETURN		
289-006	PLASTIC BATTERY BOX COVER		
293-072	POSITIVE LOAD DISCONNECT WITH DASH MOUNTED CONTROL SWITCH	8	
306-019	LOW VOLTAGE BATTERY DISCONNECT AT 12.3 VOLTS FOR ISOLATED CIRCUITS WITH LOCAL ALARM		
107-032	CUMMINS TURBOCHARGED 18.7 CFM AIR COMPRESSOR WITH INTERNAL Safety VALVE		
131-013	AIR COMPRESSOR DISCHARGE LINE		
152-041	ELECTRONIC ENGINE INTEGRAL SHUTDOWN PROTECTION SYSTEM		
128-076	CUMMINS EXHAUST BRAKE INTEGRAL WITH VARIABLE GEOMETRY TURBO WITH ON/OFF DASH SWITCH	20	
016-1C2	RH OUTBOARD UNDER STEP MOUNTED HORIZONTAL AFTERTREATMENT SYSTEM ASSEMBLY WITH RH B-PILLAR MOUNTED VERTICAL TAILPIPE		
28F-002	ENGINE AFTERTREATMENT DEVICE, AUTOMATIC OVER THE ROAD REGENERATION AND DASH MOUNTED REGENERATION REQUEST SWITCH		
239-026	10 FOOT 06 INCH (126 INCH+0/-5.9 INCH) EXHAUST SYSTEM HEIGHT		
237-1CR	RH CURVED VERTICAL TAILPIPE B-PILLAR MOUNTED ROUTED FROM STEP		
23U-001	6 GALLON DIESEL EXHAUST FLUID TANK		
30N-003	100 PERCENT DIESEL EXHAUST FLUID FILL		
23Y-001	STANDARD DIESEL EXHAUST FLUID PUMP MOUNTING		
43X-002	LH MEDIUM DUTY STANDARD DIESEL EXHAUST FLUID TANK LOCATION		
242-001	STAINLESS STEEL AFTERTREATMENT DEVICE/MUFFLER/TAILPIPE SHIELD		
273-018	HORTON DRIVEMASTER ADVANTAGE ON/OFF FAN DRIVE		
276-001	AUTOMATIC FAN CONTROL WITHOUT DASH SWITCH, NON ENGINE MOUNTED		
110-003	CUMMINS SPIN ON FUEL FILTER		

Prepared for:
Bill Rosser
OH City of Zanesville
1084 Central Ave
Zanesville, OH 43701
Phone: 740-819-8937

Prepared by:
Dustin Schwartzenberger
FYDA FREIGHTLINER
WESTERN STAR ZANESVILLE
5005 EAST PIKE
ZANESVILLE, OH 43701
Phone:

Data Code	Description	Weight Front	Weight Rear
118-008	COMBINATION FULL FLOW/BYPASS OIL FILTER		
266-017	1300 SQUARE INCH ALUMINUM RADIATOR	-20	
267-006	MOUNTING FOR FIREWALL MOUNTED SURGE TANK		
103-039	ANTIFREEZE TO -34F, OAT (NITRITE AND SILICATE FREE) EXTENDED LIFE COOLANT		
171-007	GATES BLUE STRIPE COOLANT HOSES OR EQUIVALENT		
172-001	CONSTANT TENSION HOSE CLAMPS FOR COOLANT HOSES		
270-016	RADIATOR DRAIN VALVE		
168-002	LOWER RADIATOR GUARD		
138-011	PHILLIPS-TEMRO 1000 WATT/115 VOLT BLOCK HEATER	4	
166-998	NO OIL PREHEATER		
140-022	CHROME ENGINE HEATER RECEPTACLE MOUNTED UNDER LH DOOR		
134-001	ALUMINUM FLYWHEEL HOUSING		
132-004	ELECTRIC GRID AIR INTAKE WARMER		
155-055	DELCO 12V 39MT HD/OCP STARTER WITH THERMAL PROTECTION AND INTEGRATED MAGNETIC SWITCH	-35	
Transmission			
342-582	ALLISON 3000 RDS AUTOMATIC TRANSMISSION WITH PTO PROVISION	-110	-35
Transmission Equipment			
343-339	ALLISON VOCATIONAL PACKAGE 223 - AVAILABLE ON 3000/4000 PRODUCT FAMILIES WITH VOCATIONAL MODELS RDS, HS, MH AND TRV		
84B-002	ALLISON VOCATIONAL RATING FOR CONCRETE MIXER APPLICATIONS ONLY AVAILABLE WITH 3000 PRODUCT FAMILIES		
84C-023	PRIMARY MODE GEARS, LOWEST GEAR 1, START GEAR 1, HIGHEST GEAR 6, AVAILABLE FOR 3000/4000 PRODUCT FAMILIES ONLY		
84D-023	SECONDARY MODE GEARS, LOWEST GEAR 1, START GEAR 1, HIGHEST GEAR 6, AVAILABLE FOR 3000/4000 PRODUCT FAMILIES ONLY		
84E-013	S1 PERFORMANCE PRIMARY SHIFT SCHEDULE, AVAILABLE FOR 3000/4000 PRODUCT FAMILIES ONLY		

Prepared for:
Bill Rosser
OH City of Zanesville
1084 Central Ave
Zanesville, OH 43701
Phone: 740-819-8937

Prepared by:
Dustin Schwartzenberger
FYDA FREIGHTLINER
WESTERN STAR ZANESVILLE
5005 EAST PIKE
ZANESVILLE, OH 43701
Phone:

Data Code	Description	Weight Front	Weight Rear
84F-013	S2 PERFORMANCE 2 SECONDARY SHIFT SCHEDULE, AVAILABLE FOR 3000/4000 PRODUCT FAMILIES ONLY		
84G-009	1800 RPM PRIMARY MODE SHIFT SPEED		
84H-009	1800 RPM SECONDARY MODE SHIFT SPEED		
84N-200	FUEL SENSE 2.0 DISABLED - PERFORMANCE - TABLE BASED		
85H-159	MAXIMUM OUTPUT SPEED FOR PTO OPERATION 4000 RPM - ALLISON 5TH GEN TRANSMISSIONS		
85P-998	NO REAR PTO TRANSMISSION RANGE		
34C-011	ELECTRONIC TRANSMISSION WIRING TO CUSTOMER INTERFACE CONNECTOR		
362-823	CUSTOMER INSTALLED CHELSEA 280 SERIES PTO		
363-001	PTO MOUNTING, LH SIDE OF MAIN TRANSMISSION		
341-018	MAGNETIC PLUGS, ENGINE DRAIN, TRANSMISSION DRAIN, AXLE(S) FILL AND DRAIN		
345-003	PUSH BUTTON ELECTRONIC SHIFT CONTROL, DASH MOUNTED		
97G-004	TRANSMISSION PROGNOSTICS - ENABLED 2013		
370-015	WATER TO OIL TRANSMISSION COOLER, IN RADIATOR END TANK		
346-003	TRANSMISSION OIL CHECK AND FILL WITH ELECTRONIC OIL LEVEL CHECK		
35T-001	SYNTHETIC TRANSMISSION FLUID (TES-295 COMPLIANT)		
Front Axle and Equipment			
400-1A8	DETROIT DA-F-14.7-3 14,700# FF1 71.5 KPI/3.74 DROP SINGLE FRONT AXLE	-190	
402-049	MERITOR 16.5X5 Q+ CAST SPIDER CAM FRONT BRAKES, DOUBLE ANCHOR, FABRICATED SHOES	-10	
403-002	NON-ASBESTOS FRONT BRAKE LINING		
419-023	CONMET CAST IRON FRONT BRAKE DRUMS		
409-006	FRONT OIL SEALS		
408-001	VENTED FRONT HUB CAPS WITH WINDOW, CENTER AND SIDE PLUGS - OIL		
416-022	STANDARD SPINDLE NUTS FOR ALL AXLES		
405-016	MERITOR 5.5 INCH HANDED AUTOMATIC FRONT SLACK ADJUSTERS		

Prepared for:
Bill Rosser
OH City of Zanesville
1084 Central Ave
Zanesville, OH 43701
Phone: 740-819-8937

Prepared by:
Dustin Schwartzenberger
FYDA FREIGHTLINER
WESTERN STAR ZANESVILLE
5005 EAST PIKE
ZANESVILLE, OH 43701
Phone:

Data Code	Description	Weight Front	Weight Rear
406-001	STANDARD KING PIN BUSHINGS		
536-012	TRW TAS-85 POWER STEERING		
539-003	POWER STEERING PUMP		
534-003	4 QUART POWER STEERING RESERVOIR	5	
533-001	OIL/AIR POWER STEERING COOLER	5	
40T-003	SYNTHETIC 50W FRONT AXLE LUBE		
Front Suspension			
620-004	16,000# FLAT LEAF FRONT SUSPENSION		
619-004	GRAPHITE BRONZE BUSHINGS WITH SEALS - FRONT SUSPENSION		
410-001	FRONT SHOCK ABSORBERS		
Rear Axle and Equipment			
420-051	RS-23-160 23,000# R-SERIES SINGLE REAR AXLE		-2,260
421-563	5.63 REAR AXLE RATIO		
424-001	IRON REAR AXLE CARRIER WITH STANDARD AXLE HOUSING		
386-073	MXL 17T MERITOR EXTENDED LUBE MAIN DRIVELINE WITH HALF ROUND YOKES	-60	-60
452-001	DRIVER CONTROLLED TRACTION DIFFERENTIAL - SINGLE REAR AXLE		20
878-018	(1) DRIVER CONTROLLED DIFFERENTIAL LOCK REAR VALVE FOR SINGLE DRIVE AXLE		
87B-008	INDICATOR LIGHT FOR EACH DRIVER CONTROLLED TRACTION DEVICE SWITCH		
423-033	MERITOR 16.5X7 Q+ CAST SPIDER HEAVY DUTY CAM REAR BRAKES, DOUBLE ANCHOR, FABRICATED SHOES		
433-002	NON-ASBESTOS REAR BRAKE LINING		
434-012	BRAKE CAMS AND CHAMBERS ON REAR SIDE OF DRIVE AXLE(S)		
451-023	CONMET CAST IRON REAR BRAKE DRUMS		
425-002	REAR BRAKE DUST SHIELDS		5
440-006	REAR OIL SEALS		
426-100	WABCO TRISTOP D LONGSTROKE 1-DRIVE AXLE SPRING PARKING CHAMBERS		-20
428-002	MERITOR AUTOMATIC REAR SLACK ADJUSTERS		
41T-002	SYNTHETIC 75W-90 REAR AXLE LUBE		
Rear Suspension			

Prepared for:
Bill Rosser
OH City of Zanesville
1084 Central Ave
Zanesville, OH 43701
Phone: 740-819-8937

Prepared by:
Dustin Schwartzenberger
FYDA FREIGHTLINER
WESTERN STAR ZANESVILLE
5005 EAST PIKE
ZANESVILLE, OH 43701
Phone:

Data Code	Description	Weight Front	Weight Rear
622-1DF	30,000# FLAT LEAF SPRING REAR SUSPENSION WITH HELPER AND RADIUS ROD		150
621-001	SPRING SUSPENSION - NO AXLE SPACERS		
431-001	STANDARD AXLE SEATS IN AXLE CLAMP GROUP		
623-005	FORE/AFT CONTROL RODS		
Brake System			
490-101	WABCO 4S/4M ABS WITH TRACTION CONTROL, WITH ATC OFF-ROAD SWITCH		
871-001	REINFORCED NYLON, FABRIC BRAID AND WIRE BRAID CHASSIS AIR LINES		
904-001	FIBER BRAID PARKING BRAKE HOSE		
412-001	STANDARD BRAKE SYSTEM VALVES		
432-003	RELAY VALVE WITH 5-8 PSI CRACK PRESSURE, NO REAR PROPORTIONING VALVE		
480-088	WABCO SYSTEM SAVER HP WITH INTEGRAL AIR GOVERNOR AND HEATER		
483-004	WABCO OIL COALESCING FILTER FOR AIR DRYER		
479-003	AIR DRYER MOUNTED INBOARD ON LH RAIL		
460-058	STEEL AIR TANKS MOUNTED AFT INSIDE AND/OR BELOW FRAME JUST FORWARD OF REAR SUSPENSION		
477-001	PULL CABLE ON WET TANK, PETCOCK DRAIN VALVES ON ALL OTHER AIR TANKS		
Trailer Connections			
1AZ-998	NO TRAILER RECEPTACLE BRACKET		
Wheelbase & Frame			
545-390	3900MM (154 INCH) WHEELBASE		
546-101	11/32X3-1/2X10-15/16 INCH STEEL FRAME (8.73MMX277.8MM/0.344X10.94 INCH) 120KSI		
547-034	PARTIAL INNER FRAME REINFORCEMENT AT FRONT SUSPENSION	195	-5
548-803	BODY COMPANY INSTALLED ADDITIONAL FRONT FRAME REINFORCEMENT FOR SNOW PLOW		
552-010	1000MM (39 INCH) REAR FRAME OVERHANG		
55W-003	FRAME OVERHANG RANGE: 31 INCH TO 40 INCH	20	-120
549-002	24 INCH INTEGRAL FRONT FRAME EXTENSION	122	-10
AC8-99D	CALC'D BACK OF CAB TO REAR SUSP C/L (CA) : 90.24 in		

Prepared for:
Bill Rosser
OH City of Zanesville
1084 Central Ave
Zanesville, OH 43701
Phone: 740-819-8937

Prepared by:
Dustin Schwartzenberger
FYDA FREIGHTLINER
WESTERN STAR ZANESVILLE
5005 EAST PIKE
ZANESVILLE, OH 43701
Phone:

Data Code	Description	Weight Front	Weight Rear
AE8-99D	CALCULATED EFFECTIVE BACK OF CAB TO REAR SUSPENSION C/L (CA) : 87.24 in		
AE4-99D	CALC'D FRAME LENGTH - OVERALL : 262.55		
ZF1-99D	FRAME HEIGHT TOP FRONT UNLADEN : 42.43 in		
ZF2-99D	FRAME HEIGHT TOP FRONT LADEN : 39.6 in		
ZF3-99D	FRAME HEIGHT TOP REAR UNLADEN : 41.84 in		
ZF4-99D	FRAME HEIGHT TOP REAR LADEN : 39.23 in		
FSS-0LH	CALCULATED FRAME SPACE LH SIDE : 50.05 in		
FSS-0RH	CALCULATED FRAME SPACE RH SIDE : 164.23 in		
AM6-99D	CALC'D SPACE AVAILABLE FOR DECKPLATE : 90.69 in		
553-001	SQUARE END OF FRAME		
559-001	STANDARD WEIGHT ENGINE CROSSMEMBER		
561-001	STANDARD CROSSMEMBER BACK OF TRANSMISSION		
562-001	STANDARD MIDSHIP #1 CROSSMEMBER(S)		
572-001	STANDARD REARMOST CROSSMEMBER		
565-002	HEAVY DUTY SUSPENSION CROSSMEMBER		
568-001	STANDARD WEIGHT REAR SUSPENSION CROSSMEMBER		
Chassis Equipment			
556-1E5	14 INCH PAINTED STEEL BUMPER		
574-001	BUMPER MOUNTING FOR SINGLE LICENSE PLATE		
586-015	FRONT ANTI-SPRAY CAB MOUNTED MUDFLAPS		
551-007	GRADE 8 THREADED HEX HEADED FRAME FASTENERS		
44Z-002	EXTERIOR HARNESSES WRAPPED IN ABRASION TAPE		
Fuel Tanks			
204-151	60 GALLON/227 LITER ALUMINUM FUEL TANK - LH		
218-006	25 INCH DIAMETER FUEL TANK(S)		
215-006	POLISHING OF FUEL/HYDRAULIC TANK(S) WITH POLISHED STAINLESS STEEL BANDS		
212-007	FUEL TANK(S) FORWARD		
664-002	POLISHED STEP FINISH		
205-002	CHROME FUEL TANK CAP(S)		
122-1H8	DAVCO 245 FUEL/WATER SEPARATOR WITH 12 VOLT HEAT AND WATER IN FUEL SENSOR	20	

Prepared for:
Bill Rosser
OH City of Zanesville
1084 Central Ave
Zanesville, OH 43701
Phone: 740-819-8937

Prepared by:
Dustin Schwartzenberger
FYDA FREIGHTLINER
WESTERN STAR ZANESVILLE
5005 EAST PIKE
ZANESVILLE, OH 43701
Phone:

Data Code	Description	Weight Front	Weight Rear
216-020	EQUIFLO INBOARD FUEL SYSTEM		
202-016	HIGH TEMPERATURE REINFORCED NYLON FUEL LINE		
221-998	NO FUEL COOLER		
Tires			
093-2DV	CONTINENTAL HSC1 12R22.5 16 PLY RADIAL FRONT TIRES	50	
094-1YV	CONTINENTAL HDC3 11R22.5 16 PLY RADIAL REAR TIRES		96
Hubs			
418-060	CONMET PRESET PLUS PREMIUM IRON FRONT HUBS		
450-060	CONMET PRESET PLUS PREMIUM IRON REAR HUBS		
Wheels			
502-356	ALCOA ULTRA ONE 89U64X 22.5X9.00 10-HUB PILOT 5.99 INSET ALUMINUM FRONT WHEELS	-28	
505-1EF	ALCOA LVL ONE 88367X 22.5X8.25 10-HUB PILOT ALUMINUM DISC REAR WHEELS		-100
50T-998	NO FRONT AXLE WHEEL/HUB COVER		
496-011	FRONT WHEEL MOUNTING NUTS		
497-011	REAR WHEEL MOUNTING NUTS		
Cab Exterior			
829-1A8	110 INCH BBC STEEL CONVENTIONAL CAB		
82A-023	WESTERN STAR PAINTED ALUMINUM CAB SKIRT		
650-044	AIR CAB MOUNTS WITH CHECK VALVE		
705-056	STAINLESS STEEL SILL PLATES WITH RACEWAY	5	
648-002	NONREMOVABLE BUGSCREEN MOUNTED BEHIND GRILLE		
667-001	FRONT FENDERS		
754-001	2 INCH FENDER EXTENSIONS	5	
678-034	LH AND RH EXTERIOR GRAB HANDLES WITH RUBBER INSERTS AND RH INTERIOR GRAB HANDLE MOUNTED TO A POST		
646-008	STATIONARY BRIGHT FINISH GRILLE		
65X-003	CHROME HOOD MOUNTED AIR INTAKE GRILLE		
640-008	GALVANEALED STEEL SEVERE SERVICE CAB		
644-004	FIBERGLASS HOOD		

Prepared for:
Bill Rosser
OH City of Zanesville
1084 Central Ave
Zanesville, OH 43701
Phone: 740-819-8937

Prepared by:
Dustin Schwartzenberger
FYDA FREIGHTLINER
WESTERN STAR ZANESVILLE
5005 EAST PIKE
ZANESVILLE, OH 43701
Phone:

Data Code	Description	Weight Front	Weight Rear
727-096	DUAL ROUND AIR HORNS, SINGLE BASE, MOUNTED UNDER CAB		
726-001	SINGLE ELECTRIC HORN		
657-1CC	ALL UNIT(S) KEYED ALIKE WITH CUSTOMER SPECIFIED KEY NUMBER D420		
575-001	REAR LICENSE PLATE MOUNT END OF FRAME		
312-031	SINGLE RECTANGULAR H4 HALOGEN HEADLIGHTS WITH BRIGHT BEZELS		
302-001	(5) AMBER MARKER LIGHTS		
314-824	WIRING AND SWITCH FOR CUSTOMER FURNISHED SNOW PLOW LAMPS WITH DUAL CONNECTIONS AT BUMPER		
294-001	INTEGRAL STOP/TAIL/BACKUP LIGHTS		
300-015	STANDARD FRONT TURN SIGNAL LAMPS		
744-009	DUAL WEST COAST STAINLESS STEEL HEATED MIRRORS WITH LIGHTS		
797-001	DOOR MOUNTED MIRRORS		
796-001	102 INCH EQUIPMENT WIDTH		
743-1AA	LH AND RH SUREPLUS 574 8 INCH BRIGHT FINISH HEATED CONVEX MIRRORS WITH SEPARATE ADJUSTMENT, MOUNTED BELOW MIRROR		
74A-001	RH DOWN VIEW MIRROR		
729-001	STANDARD SIDE/REAR REFLECTORS		
677-055	RH AFTERTREATMENT SYSTEM CAB ACCESS WITH POLISHED DIAMOND PLATE COVER		
768-046	17.5X35 INCH TINTED REAR WINDOW		
661-006	TINTED DOOR GLASS		
654-006	RH ELECTRIC AND LH MANUAL WINDOWS	2	
663-002	2-PIECE TINTED CURVED GASKET MOUNTED WINDSHIELD		
659-026	2 GALLON WINDSHIELD WASHER RESERVOIR WITH FLUID LEVEL INDICATOR, MOUNTED UNDER CAB, WITH REMOTE FILL		
Cab Interior			
707-1D4	SMOKY MOUNTAIN GRAY VINYL PREMIUM INTERIOR		
70K-005	BLACK HARD TRIM		
706-049	BASE LEFT HAND DOOR TRIM		
708-049	BASE RIGHT HAND DOOR TRIM		
772-007	BLACK MATS WITH DOUBLE INSULATION		

Prepared for:
Bill Rosser
OH City of Zanesville
1084 Central Ave
Zanesville, OH 43701
Phone: 740-819-8937

Prepared by:
Dustin Schwartzenberger
FYDA FREIGHTLINER
WESTERN STAR ZANESVILLE
5005 EAST PIKE
ZANESVILLE, OH 43701
Phone:

Data Code	Description	Weight Front	Weight Rear
785-007	DASH MOUNTED ASH TRAY AND LIGHTER, DRIVER SIDE		
691-001	FORWARD ROOF MOUNTED CONSOLE		
693-025	LH AND RH DOOR MAP POCKETS		
741-015	(2) COAT HOOKS ON BACKWALL OF CAB		
742-032	(1) DOUBLE CUP HOLDER WITH CELL PHONE HOLDER LH OR RH DASH		
680-034	TWO-TONE CHARCOAL UPPER/COOL GRAY LOWER SOFT TOUCH WING DASH WITH BLACK DRIVER SIDE COSMETIC UNDER DASH COVER		
700-023	HEATER, DEFROSTER AND AIR CONDITIONER WITH CONSTANT TEMPERATURE CONTROL AND COSMETIC COVER		
701-016	HVAC DUCTING WITH FOAM MAIN FRESH AIR FILTER		
703-005	MAIN HVAC CONTROLS WITH RECIRCULATION SWITCH		
170-015	STANDARD HEATER PLUMBING		
130-041	VALEO HEAVY DUTY A/C REFRIGERANT COMPRESSOR		
698-001	RADIATOR MOUNTED AIR CONDITIONER CONDENSER		
702-002	BINARY CONTROL, R-134A		
739-001	CAB INSULATION		
285-033	AUTOMATIC SELF-RESET CIRCUIT BREAKERS/FUSES IN DASH POWER DISTRIBUTION BOXES AND FUSES IN AUXILIARY POWER DISTRIBUTION BOXES		
324-075	DOOR ACTIVATED DOME LIGHT, UNDER DASH LIGHT AND LH AND RH DOOR MOUNTED COURTESY LIGHTS		
655-001	CAB DOOR LATCHES WITH MANUAL DOOR LOCKS		
756-1DD	BASIC HIGH BACK AIR SUSPENSION DRIVER SEAT WITH 1 CHAMBER AIR LUMBAR, INTEGRATED CUSHION EXTENSION AND REAR CUSHION TILT		
760-294	BATTERY BOX MID BACK NON SUSPENSION PASSENGER SEAT		
759-007	DUAL DRIVER SEAT ARMRESTS, NO PASSENGER SEAT ARMRESTS	4	
758-039	MORDURA CLOTH DRIVER SEAT		
761-039	MORDURA CLOTH PASSENGER SEAT		
763-003	3 POINT DRIVER AND PASSENGER SEAT BELT RETRACTORS		

Prepared for:
Bill Rosser
OH City of Zanesville
1084 Central Ave
Zanesville, OH 43701
Phone: 740-819-8937

Prepared by:
Dustin Schwartzenberger
FYDA FREIGHTLINER
WESTERN STAR ZANESVILLE
5005 EAST PIKE
ZANESVILLE, OH 43701
Phone:

Data Code	Description	Weight Front	Weight Rear
532-002	ADJUSTABLE TILT AND TELESCOPING STEERING COLUMN		
540-045	4-SPOKE 18 INCH (450MM) LEATHER WRAPPED STEERING WHEEL WITH SWITCHES		
765-002	DRIVER AND PASSENGER INTERIOR SUN VISORS		
Instruments & Controls			
185-002	NON-ADJUSTABLE SUSPENDED PEDALS		
106-002	ELECTRONIC FOOT ACCELERATOR		
870-002	BRIGHT ARGENT FINISH GAUGE BEZELS		
732-018	ROYAL ROSEWOOD MATTE FINISH DRIVER INSTRUMENT PANEL		
734-017	ROSEWOOD VINYL MATTE FINISH CENTER INSTRUMENT PANEL INSERT		
486-001	LOW AIR PRESSURE INDICATOR LIGHT AND AUDIBLE ALARM		
840-002	2 INCH PRIMARY AND SECONDARY AIR PRESSURE GAUGES		
198-002	INTAKE MOUNTED AIR RESTRICTION INDICATOR WITH GRADUATIONS		
721-021	87 DB TO 112 DB SELF-ADJUSTING BACKUP ALARM		3
149-015	ELECTRONIC CRUISE CONTROL WITH CONTROLS ON STEERING WHEEL SPOKES		
156-007	KEY OPERATED IGNITION SWITCH AND INTEGRAL START POSITION; 4 POSITION OFF/RUN/START/ACCESSORY		
811-041	ICU4ME DRIVER MESSAGE CENTER WITH GRAPHICAL DISPLAY, BLACK FACE GAUGES, DIAGNOSTICS AND DATA LINKED		
160-038	HEAVY DUTY ONBOARD DIAGNOSTICS INTERFACE CONNECTOR LOCATED BELOW LH DASH		
844-001	2 INCH ELECTRIC FUEL GAUGE		
148-003	PROGRAMMABLE RPM CONTROL - ELECTRONIC ENGINE		
44Y-001	CUSTOMER INTERFACE CONNECTOR LOCATED BETWEEN SEATS WITH CAPS		
856-001	ELECTRICAL ENGINE COOLANT TEMPERATURE GAUGE		
864-001	2 INCH TRANSMISSION OIL TEMPERATURE GAUGE		

Prepared for:
Bill Rosser
OH City of Zanesville
1084 Central Ave
Zanesville, OH 43701
Phone: 740-819-8937

Prepared by:
Dustin Schwartzenberger
FYDA FREIGHTLINER
WESTERN STAR ZANESVILLE
5005 EAST PIKE
ZANESVILLE, OH 43701
Phone:

Data Code	Description	Weight Front	Weight Rear
867-004	ELECTRONIC OUTSIDE TEMPERATURE SENSOR DISPLAY IN DRIVER MESSAGE CENTER		
372-063	(1) DASH MOUNTED PTO SWITCH WITH INDICATOR LAMP FOR CUSTOMER INSTALLED PTO	10	
852-002	ELECTRIC ENGINE OIL PRESSURE GAUGE		
746-115	AM/FM/WB WORLD TUNER RADIO WITH BLUETOOTH AND USB AND AUXILIARY INPUTS, J1939	10	
747-002	ROOF/OVERHEAD CONSOLE MOUNTED RADIO		
750-004	(4) RADIO SPEAKERS IN CAB		
753-021	AM/FM ANTENNA MOUNTED ON LH FRONT A-PILLAR	2	
748-026	POWER AND GROUND WIRING FOR CB RADIO IN OVERHEAD CONSOLE		
749-001	ROOF/OVERHEAD CONSOLE CB RADIO PROVISION		
752-017	MULTI-BAND AM/FM/WB/CB LH MIRROR MOUNTED ANTENNA SYSTEM		
810-042	ELECTRONIC MPH SPEEDOMETER WITH SECONDARY KPH SCALE, WITH ODOMETER		
817-008	STANDARD VEHICLE SPEED SENSOR WITH ADDITIONAL SIGNAL FOR CUSTOMER USE LOCATED BETWEEN DRIVER AND PASSENGER SEATS		
812-001	ELECTRONIC 3000 RPM TACHOMETER		
813-998	NO VEHICLE PERFORMANCE MONITOR	-5	
162-002	IGNITION SWITCH CONTROLLED ENGINE STOP		
836-015	DIGITAL VOLTAGE DISPLAY INTEGRAL WITH DRIVER DISPLAY		
660-008	SINGLE ELECTRIC WINDSHIELD WIPER MOTOR WITH DELAY		
304-059	CAB/TRAILER MARKER LIGHT SWITCH WITH SEPARATE HEADLIGHT SWITCH WITH HDLP/MRKR INTERRUPT SWITCH ON STEERING WHEEL & DASH SW FOR CUSTOMER FURNISHED SNOWPLOW LTS		
882-018	ONE VALVE PARKING BRAKE SYSTEM WITH DASH VALVE CONTROL AUTONEUTRAL AND WARNING INDICATOR		
299-039	SELF CANCELING TURN SIGNAL SWITCH, HEADLAMP HIGH/LOW AND FLASH, WASH/WIPE/INTERMITTENT		
298-036	PACIFIC INSIGHT ELECTRONIC FLASHER		

Prepared for:
Bill Rosser
OH City of Zanesville
1084 Central Ave
Zanesville, OH 43701
Phone: 740-819-8937

Prepared by:
Dustin Schwartzenberger
FYDA FREIGHTLINER
WESTERN STAR ZANESVILLE
5005 EAST PIKE
ZANESVILLE, OH 43701
Phone:

Data Code	Description	Weight Front	Weight Rear
Design			
065-000	PAINT: ONE SOLID COLOR		
Color			
980-5F6	CAB COLOR A: L0006EY WHITE ELITE EY		
96J-001	CAB INTERIOR PAINTED SAME AS CAB COLOR		
986-020	BLACK, HIGH SOLIDS POLYURETHANE CHASSIS PAINT		
964-993	BUMPER PAINTED SAME AS CHASSIS		
Certification / Compliance			
996-001	U.S. FMVSS CERTIFICATION, EXCEPT SALES CABS AND GLIDER KITS		
Secondary Factory Options			
95M-998	NO CUSTOMER FURNISHED MATERIAL SPECIFIED		
999-014	DEALER HAS BEEN ADVISED OF AND ACCEPTED RESPONSIBILITY FOR MODIFICATIONS DUE TO POSSIBLE PTO/CHASSIS INTERFERENCE		
Raw Performance Data			
AE4-99D	CALC'D FRAME LENGTH - OVERALL : 262.55		
AE8-99D	CALCULATED EFFECTIVE BACK OF CAB TO REAR SUSPENSION C/L (CA) : 87.24 in		
AM6-99D	CALC'D SPACE AVAILABLE FOR DECKPLATE : 90.69 in		

TOTAL VEHICLE SUMMARY

Weight Summary

	Weight Front	Weight Rear	Total Weight
Factory Weight+	8404 lbs	4074 lbs	12478 lbs
Total Weight+	8404 lbs	4074 lbs	12478 lbs

Prepared for:
Bill Rosser
OH City of Zanesville
1084 Central Ave
Zanesville, OH 43701
Phone: 740-819-8937

Prepared by:
Dustin Schwartzenberger
FYDA FREIGHTLINER
WESTERN STAR ZANESVILLE
5005 EAST PIKE
ZANESVILLE, OH 43701
Phone:

(+) Weights shown are estimates only.
If weight is critical, contact Customer Application Engineering.

(***) All cost increases for major components (Engines, Transmissions, Axles, Front and Rear Tires) and government mandated requirements, tariffs, and raw material surcharges will be passed through and added to factory invoices.

Prepared for:
Bill Rosser
OH City of Zanesville
1084 Central Ave
Zanesville, OH 43701
Phone: 740-819-8937

Prepared by:
Dustin Schwartzenberger
FYDA FREIGHTLINER
WESTERN STAR ZANESVILLE
5005 EAST PIKE
ZANESVILLE, OH 43701
Phone:

DIMENSIONS

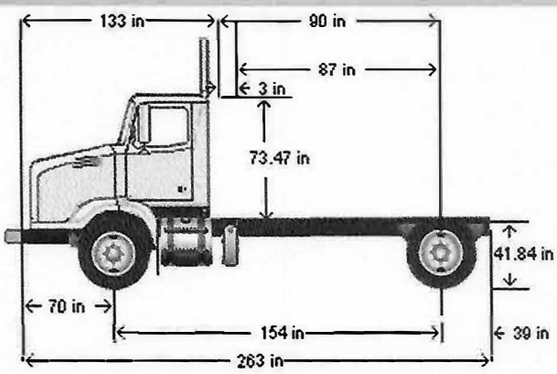

VEHICLE SPECIFICATIONS SUMMARY - DIMENSIONS

Model 4700SB
Wheelbase (545) ..... 3900MM (154 INCH) WHEELBASE
Rear Frame Overhang (552) ..... 1000MM (39 INCH) REAR FRAME OVERHANG
Fifth Wheel (578) ..... NO FIFTH WHEEL
- Mounting Location (577) ..... NO FIFTH WHEEL LOCATION
- Maximum Forward Position (in) 0
- Maximum Rearward Position (in) 0
- Amount of Slide Travel (in) 0
- Slide Increment (in) 0
- Desired Slide Position (in) 0.0

Cab Size (829) ..... 110 INCH BBC STEEL CONVENTIONAL CAB
Sleeper (682) ..... NO SLEEPER BOX/SLEEPERCAB
Exhaust System (016) ..... RH OUTBOARD UNDER STEP MOUNTED HORIZONTAL AFTERTREATMENT SYSTEM ASSEMBLY WITH RH B-PILLAR MOUNTED VERTICAL TAILPIPE

TABLE SUMMARY - DIMENSIONS

Prepared for:
Bill Rosser
OH City of Zanesville
1084 Central Ave
Zanesville, OH 43701
Phone: 740-819-8937

Prepared by:
Dustin Schwartzenberger
FYDA FREIGHTLINER
WESTERN STAR ZANESVILLE
5005 EAST PIKE
ZANESVILLE, OH 43701
Phone:

Dimensions	Inches
Bumper to Back of Cab (BBC)	133.2
Bumper to Centerline of Front Axle (BA)	69.9
Min. Cab to Body Clearance (CB)	3.0
Back of Cab to Centerline of Rear Axle(s) (CA)	90.2
Effective Back of Cab to Centerline of Rear Axle(s) (Effective CA)	87.2
Back of Cab Protrusions (Exhaust/Intake) (CP)	2.0
Back of Cab Protrusions (Side Extenders/Trim Tab) (CP)	0.0
Back of Cab Protrusions (CNG Tank)	0.0
Back of Cab Clearance (CL)	3.0
Back of Cab to End of Frame	129.6
Cab Height (CH)	73.5
Wheelbase (WB)	153.5
Frame Overhang (OH)	39.4
Overall Length (OAL)	262.9
Rear Axle Spacing	0.0
Unladen Frame Height at Centerline of Rear Axle	41.8

Performance calculations are estimates only. If performance calculations are critical, please contact Customer Application Engineering.

Prepared for:
Bill Rosser
OH City of Zanesville
1084 Central Ave
Zanesville, OH 43701
Phone: 740-819-8937

Prepared by:
Dustin Schwartzenberger
FYDA FREIGHTLINER
WESTERN STAR ZANESVILLE
5005 EAST PIKE
ZANESVILLE, OH 43701
Phone:

QUOTATION

4700 SET-BACK FRONT AXLE CHASSIS

SET BACK AXLE - TRUCK
CUM L9 330 HP @ 2000 RPM, 2200 GOV RPM, 1000 LB/FT @ 1400 RPM
ALLISON 3000 RDS AUTOMATIC TRANSMISSION WITH PTO PROVISION
RS-23-160 23,000# R-SERIES SINGLE REAR AXLE
30,000# FLAT LEAF SPRING REAR SUSPENSION WITH HELPER AND RADIUS ROD
DETROIT DA-F-14.7-3 14,700# FF1 71.5 KPI/3.74 DROP SINGLE FRONT AXLE
16,000# FLAT LEAF FRONT SUSPENSION

110 INCH BBC STEEL CONVENTIONAL CAB
3900MM (154 INCH) WHEELBASE
11/32X3-1/2X10-15/16 INCH STEEL FRAME (8.73MMX277.8MM/0.344X10.94 INCH) 120KSI
1000MM (39 INCH) REAR FRAME OVERHANG
PARTIAL INNER FRAME REINFORCEMENT AT FRONT SUSPENSION
BODY COMPANY INSTALLED ADDITIONAL FRONT FRAME REINFORCEMENT FOR SNOW PLOW

			PER UNIT		TOTAL
VEHICLE PRICE	TOTAL # OF UNITS (1)	$	84,763	$	84,763
EXTENDED WARRANTY		$	0	$	0
DEALER INSTALLED OPTIONS		$	0	$	0
CUSTOMER PRICE BEFORE TAX		**$**	***84,763***	**$**	***84,763***
TAXES AND FEES					
TAXES AND FEES		$	0	$	0
OTHER CHARGES		$	0	$	0
TRADE-IN					
TRADE-IN ALLOWANCE		$	(0)	$	(0)
BALANCE DUE	**(LOCAL CURRENCY)**	**$**	**84,763**	**$**	**84,763**

COMMENTS: Projected delivery on ___ / ___ / ___ provided the order is received before ___ / ___ / ___.
APPROVAL: Please indicate your acceptance of this quotation by signing below: Customer:
X_____ Date: ___ / ___ / ___.

Daimler Truck Financial
Financing that works for you.

See your local dealer for a competitive quote from Daimler Truck Financial, or contact us at Information@dtfoffers.com.
Daimler Truck Financial offers a variety of finance, lease and insurance solutions to fit your business needs. For more information about our products and services, visit our website at www.daimler-truckfinancial.com.

Attachment to Ordinance No. 2020-65

ACE EQUIPMENT
1130 Newark Road P.O. Box 2605 Zanesville, Ohio 43702-2605
888-799-6220 740 453-0551 FAX 740 453-7023

Quote: February 21, 2020
Order:
Salesman: Kyle Fleck

Name: Fyda Freightliner Western Star Zanesville
Address: 5005 East Pike, Zanesville, OH 43701
CITY OF ZANESVILLE

Chassis Information:	Year:	Make:	Model:	Color:	C/A:
	2020	Western Star	4700 96" CA		

Dump Body Specifications:

A. Galion Model 433FT-11
- 11' model 8.6 to 10.6 cubic yard capacity
- Inside width shall be 86"
- Sides shall be 36" high
- Tailgate shall be 44" high
- Front shall be 46" high

B. Sides and Front
- Shall be fabricated from 3/16" 201-2b stainless-steel
- Shall have 2" wide side board pockets
- Boxed top rail
- Smooth side design with intermediate horizontal "V" side braces (pressed out)
- All welds shall be continuous

C. Tailgate
- Shall be fabricated from 3/16" 201-2b stainless-steel
- Fully boxed upper and lower rails and 3 panel tailgate
- Welds shall be continuous
- Upper and lower dog-leg slotted chain keepers with sufficient chain to allow tailgate to lay flat
- Integral dirt shedding top frame rail
- Air tailgate control
- Tailgate to have (3) coal doors

D. Floor and Understructure
- Floor shall be fabricated from ¼" AR450 steel
- Radius floor wings at sides with one-piece center sheet

- Crossmemberless understructure – NO CROSSMEMBERS
- Full width rear apron
- 8" I-beam longsills

E. Tailgate Latch
- To be air controlled
- Shall be retractable type with minimum 1" flame cut latch finger
- Tailgate linkage to have grease zerks at rear

F. Lights and Reflectors
- Shall meet federal FMVSS #108
- (1) LED stop, turn, tail light recessed in each rear corner post
- (1) LED backup light recessed in each rear corner post
- LED clearance lights shall be recessed for protection and mounted in rubber sockets
- Wiring shall be one-piece and in a plastic convoluted loom

G. Cab Shield
- Shall be fabricated from 10-gauge 201-2b stainless-steel
- Shall be ½ roll (24" over cab)
- To be made stationary

H. Miscellaneous Items
- Power distribution panel to be mounted on inside back wall of cab
- (1) oval LED amber/green strobe light recessed in each rear corner post
- (1) oval LED amber/green strobe light recessed in each end of cab shield front facing
- (1) oval LED amber/green strobe light recessed in SS box on top of cab shield in each end of cab shield rear facing
- (1) oval LED amber/green strobe light recessed in each side of cab shield side facing
- (2) 4" LED spreader lights installed at rear
- (1) stainless-steel spring-loaded shovel holder installed street side
- (2) Stainless Steel Handles location TBD
- 2" x 10" oak side boards painted black installed each side
- Stainless-steel tarp rail full length of body both sides
- Pull out stainless-steel ladder installed front of body driver's side
- 97db Backup alarm
- ¾" Closure plate at rear with 20 Ton pintle hook hitch, D-rings and 6 pin trailer-plug, round
- Rear mud flaps
- Fleet Engineers poly fenders installed over rear wheels with stainless steel mount
- LED heated plow lights mounted on hood on stainless-steel brackets
- Underside of body and hoist components painted black

Hoist Specifications:

A. Galion Model CS100-4.5-3DA
- Front trunnion mount telescopic style hoist
- 12" doghouse built into front of body
- Double acting – power up/power down
- Body prop to support empty body weight
- Operated by central hydraulic system

Plow Specifications:

A. Henderson RSP19-11' Reversable Snow Plow
- 11' Length x 42" Height
- Integral Moldboard Shield
- Adjustable Cutting-Edge Trip- Torsion Spring
    - 5/8" x 8" One Piece AASHTO Punch
- Pin and Loop Oscillating Hitch Plow Portion
- HPH Truck Portion Hitch with side plates
- Moldboard Sheet Material – 10 ga GR50 Steel
- 4" x 2" x 10" Reversing Nitrided Cylinders
- Painted NY Yellow
- Standard Circle Frame with Top Mount Cylinders
- NO Running Gear
- (2) TruckLite Halogen Plow Lights mounted on stainless steel brackets
- 12" Rubber Deflector with SS Backer
- 36" Plastic Side Markers

Spreader Specifications:

A. Henderson TGS
- Hydraulic Drive
- Single Spinner
- 201 SS Material
- 6" Diameter Auger, Direct Drive
- Standard Brackets for 96" Wide Bodies

Central Hydraulic System Specifications:

The hydraulic pump will be cast iron, load sensing axial piston pump driven off the truck transmission by way of a Constant Mesh PTO. The pump will have an internal bleed-down compensator. The pump case drain line shall run from the pump directly to the reservoir without passing through any filter. This system will also have an automatic shutdown feature. In the instance that a hose would rupture, or system loses oil in another way, a float in the reservoir will trip the automatic shut down to stop flow of remining oil to prevent pump failure.

The truck functions will be controlled by a sectional, balance spool type valve to be mounted inside valve enclosure built into the oil reservoir and actuated by air control levers. This valve to be pressure compensated, load sensing, closed center type with a nominal rating of at least 30 GPM. Two sections to have individual flow compensators. It shall be arranged to operate the following functions:

1. Inlet/outlet
2. Double-acting underbody hoist
3. Double-acting snow plow lift cylinder
4. Snow plow power reversing cylinders
5. Pressure carry-over

A Freedom 2.1 electronic spreader control system also to be mounted in cab within easy reach of driver.

There will be a 10-micron return line filter located in the reservoir and it shall be equipped with a condition gauge and by-pass.

The reservoir to be stainless-steel, frame mounted, with a capacity of 30-gallons. It shall have a 3" port for the suction line, a 1 ¼" port for the return line and a magnetic drain plug. It shall have an internal baffle between the suction and return port and a separate port for the pump case drain. A sight/temperature gauge shall be installed on the front of the reservoir. The reservoir will have an enclosure to house the hydraulic control valve.

All hoses will conform to SAE standard and be equipped with 37-degree JIC swivel fittings at each component connection. The suction line to the pump shall be 2" diameter and conform to SAE standard 100R4. In addition, all connections that see system pressure shall be of the JIC or O-ring type to eliminate all chance of leaks. Rubber hoses ran to front for plow operation. Stainless-steel hydraulic tubing to be run to rear of truck spreader operation. Stainless-steel quick couplers mounted to county specifications.

Total Package Price: $62,454.00

Options:

1) TruckLite Heated LED Plow Light ILO Halogen Add: $400.00

This quotation becomes an order when signed here: Name_____Title_____

This order is not binding until approved by a company official. All quotations and delivery promises made, and orders accepted subject to delays caused by fire, accident, strikes or other causes beyond our control. Deliveries delayed by any of the above conditions shall not constitute cause for cancellation of this order. Prices subject to change without notice.

****A 3% CONVENIENCE FEE WILL APPLY TO ALL CREDIT CARD PURCHASES****

APPROXIMATE LEAD TIME AS OF TODAY IS 22-24 WEEKS FOR THE DUMP BODY WITH THAT SAID I AM ESTIMATING THIS BEING COMPLETED WITHIN 28-30 FROM RECEIPT OF PURCHASE ORDER.

Community Development Committee
Mark Baker, Chair

ORDINANCE NO. 2020-67
INTRODUCED BY COUNCIL

AN ORDINANCE AMENDING CHAPTER 1141.05 TABLE 15 PERMITTED AND CONDITIONAL USES IN BUSINESS DISTRICTS

WHEREAS, through a comprehensive review of the Planning and Zoning Code, The Community Development Department has identified a need to update the chapter; and

WHEREAS, according to Section 1117.01 "To adapt to changing development conditions and provide for the phased implementation of the City Comprehensive Plan, the Planning Commission may from time to time recommend, and Council may adopt, amendments to the provisions of the text of this Zoning Code…as provided by the Ohio Revised Code.", and

WHEREAS, the Community Development Staff has recognized a need to amend and update the Chapter 1141.05 Table 15: Permitted and Conditional Uses in Business Districts; and

WHEREAS, proper notification of the intent of this proposed legislation was given in a newspaper of general circulation; and

WHEREAS, after taking testimony and discussion during the March 17th, 2020 regular meeting, the Zanesville Planning Commission has recommended to City Council that the proposed amendments to Chapter 1141.05 be approved.

NOW, THEREFORE, BE IT ORDAINED by the Council of the City of Zanesville, State of Ohio; that

SECTION ONE: Chapter 1141.05 Table 15 of the City of Zanesville Planning and Zoning Code currently reads:

1141.05 TABLE 15: PERMITTED AND CONDITIONAL USES IN BUSINESS DISTRICTS.

	Zoning Districts						
USES	C1	C2	C3	C4	O1	O2	I1
Abbatoirs or slaughterhouses							S
Accessory uses, buildings and structures to all conditional uses in the district, including off-street parking and loading and signs as provided in Chapters 1149 and 1153	C	C	C	C	C	C	P
Acid uses							S
Adult uses, as defined in this Code				S			S
Air rights development	S	S	S	S	S	S	S
Airports						S	S
Amusement arcades				S			
Animal hospitals		P	P	P			
Antique shops		P	P	P			
Any manufacturing, fabricating, processing, cleaning, servicing, testing, repair or assembly facilities that are not listed elsewhere as permitted or conditional uses, including facilities for abrasive products; boilers and tanks; chemicals; clay; coal, coke and tar products; fiberglass; foundries; glass; metal; textiles; transportation equipment; and any other facilities that are able to conform to the performance standards, Chapter 1161, for heavy industrial uses							S

Arsenals							S
Art shops or galleries		P	P	P			
Auction rooms				S			
Auditoriums and convention and exhibit halls				S		C	
Automated teller machines	P	P	P	P	P	P	P
Automobile Title Loans		S	S	S			
Automobile and truck rental establishments				C		C	
Automobile laundries/car wash				P			
Automobile laundries with five or less bays		C	C	C			

Zoning Districts							
USES	**C1**	**C2**	**C3**	**C4**	**O1**	**O2**	**I1**
Automobile part and accessory stores		P	P	P			
Automobile service stations	S	S	S	S			S
Automotive repair, major				S			S
Automotive repair, minor		C	C	C			
Bakery plants							P
Batch asphaltic concrete, Portland cement or mortar mixing plants							S
Beauty shops, barber shops and hair styling salons	P	P	P	P			
Bench signs		C	C	C			C
Bicycle sales, rental and repair shop		P	P	P			
Blood Plasma Center			S	S			
Blueprinting and photostating establishments		P	P	P		C	
Bottled gas dealers				P			
Building materials and products sales				P			
Building supply sales under 8,000 square feet with no outside storage or accessory structure		C	C	C			
Business machine sales, rental and service		P	P	P		C	
Camera and photographic supply stores		P	P	P			
Camping equipment sales		P	P	P			
Catering establishments		P	P	P			
Cemeteries	C	C	C	C	C	C	C
Child day care centers, as defined in this Code	S	S	S	S	S	S	
Clothing repair, hat repair and shoe repair stores and tailor shops	P	P	P	P			
Commercial schools, such as for business or electronics							P
Computer sales and rental		P	P	P			
Computer sales, rental and service						C	
Conditional public uses, as defined in this Code	C	C	C	C			C

Zoning Districts							
USES	C1	C2	C3	C4	O1	O2	I1
Contractors and construction offices				P			P
Crematories							C
Crematories as part of mortuaries		C	C	C	C	C	
Creosote							C
Currency exchanges	P	P	P	P		C	
Custom dressmaking establishments		P	P	P			
Department stores, junior department stores and discount department stores		P	P	P			
Distillation of tar							S
Domestic appliance stores, including radio, television, stereo, lighting, clock and music stores	P	P	P	P			
Donut shops	C	C	C	C		C	
Drug stores	P	P	P	P		C	
Drive-in established, as defined in this Code	C	C	C	C			
Dry cleaning plants and laundries							P
Dwelling unit of caretaker or guard							S
Dwelling units above the ground floor in buildings commercial buildings	P	P	P	P	P	P	
Dwelling units above the ground floor with a ground floor use permitted in O-1 and O-2 Districts meeting the minimum lot area requirements for RM- 2 uses, and all other requirements of the districts					P	P	
Educational institutions as defined in this Code	S	S	S	S	S	S	
E-Commerce	P	P	P	P	P	P	
E-Commerce & Distribution Facility	S	S	S	S			
Electrical showrooms and shops				P			
Employment agencies		P	P	P		P	
Equipment rental				P			
Exterminating services		P	P	P			

Zoning Districts							
USES	**C1**	**C2**	**C3**	**C4**	**O1**	**O2**	**I1**
Fat rendering							S
Feed, flour and grain storage							S
Fertilizer							S
Financial institutions, including banks, savings and loans, and commercial loan offices	P	P	P	P	P	P	
Florist shops	P	P	P	P		C	
Food and grocery stores under 5,000 square feet	P	P	P	P			
Food and grocery stores over 5,000 square feet	C	P	P	P			

Fortune tellers, palm readers, clairvoyants			P	P			
Fuel and ice sales			P	P			
Fuel storage, bulk				S			S
Furniture stores including upholstery when conducted as part of the retail operations and secondary hereto		P	P	P			
Furrier shops, including incidental stores and conditioning of fur		P	P	P			
Garden, Community	C	C	C	C	C	C	C
Game rooms, as defined in this Code	C	C	C	C			
Garden supply, tool and seed stores, including lawn mower, snowmobile and snow blower sales and service		P	P	P			
General retail	C	C	C	C		S	
Golf courses and country clubs, private	C	C	C	P	C	P	P
Graphics and drafting services					C	P	P
Greenhouses and nurseries				P			
Gunsmith shops		P	P	P			
Hardware stores		P	P	P			
Health clubs as defined in this Code		P	P	P		P	
High-nuisance manufacturing and processing operations involving:							S
Hobby and craft shops		P	P	P			

Zoning Districts							
USES	**C1**	**C2**	**C3**	**C4**	**O1**	**O2**	**I1**
Hospitals, nursing homes, group homes, mental health centers and related uses	S	S	S	S	S	S	
Hotels and motels		P	P	P		P	
Indoor amusement establishments, including bowling alleys, pool halls, dance halls, commercial swimming pools and skating rinks		C	C	C			
Insurance offices	P	P	P	P	P	P	
Interior decorating shops, including upholstery and the making of draperies, slip covers and other similar articles when conducted as part of the retail operations and secondary thereto		P	P	P			
Junk yards				S			S
Kennels, pet grooming and veterinary offices		P	P	P			
Laboratories, medical, dental, research and testing		P	P	P		P	P
Landfills, dumps and incinerators							S
Liquor stores (package goods only)	P	P	P	P			
Locksmith shops		P	P	P			
Low-nuisance light manufacturing, fabricating, processing, cleaning, servicing, testing, repair and assembly facilities not listed elsewhere as permitted or conditional uses that are able to conform to the performance standards, Chapter 1161, for light industry herein							P
Machinery sales				C			C

Mail order houses and letter shops				P		P	
Manufactured buildings approved by the Building Code for commercial use and conforming with the seven standards listed in Table 1137.05 Manufactured buildings, other than buildings or trailers for construction purposes, not complying with Table 1137.05 may be approved for a period not to exceed one year.		C	C	C			
Manufactured home sales (no open sales lot)				P			
Massage and massage services		S	S	S			

Zoning Districts							
USES	**C1**	**C2**	**C3**	**C4**	**O1**	**O2**	**I1**
Medical, dental and optometry offices and clinics	P	P	P	P	P	P	
Meeting and banquet halls		P	P	P		P	
Millinery shops		P	P	P			
Mini-warehouses				S			C
Model home and garage displays				S			
Monument sales (no open sales lot)				P			
Mortuaries, as defined in this Code		C	C	C	C	C	
Motor vehicle sales (no open sales lot) or rental, including cars, trucks, boats, trailers, recreational vehicles, motorcycles, motor scooters and mopeds				P			
Motor vehicle, trailer, and mobile home repair services				S			
Motor, rail or air freight terminals							C
Multi-family residential uses					C	C	
Natural or synthetic rubber, caoutchouc or gutta percha							C
Newspaper distribution agencies for home delivery and retail trade	P	P	P	P		P	
Newspaper, magazine and tobacco shops	P	P	P	P		C	
Nightclub			S	S			S
Offices, business and professional		P	P	P	P	P	
Offices, government, political and institutional		P	P	P	P	P	
Off-street parking lots, public garages or storage garages as principal uses			P	P		C	C
Off-street parking lots, public garages or storage garages, other than as accessory uses						C	
Open sales lots as defined in this Code as a principal or accessory use				S			
Ore reduction							S
Other temporary uses approved in accordance with provisions for temporary uses in Chapter 1129							P

Zoning Districts							
USES	**C1**	**C2**	**C3**	**C4**	**O1**	**O2**	**I1**
Outdoor advertising signs				P			P
Outdoor amusement establishments, including archery ranges, miniature golf and similar facilities				S			
Outdoor recreation or indoor/outdoor entertainment centers				S			S

Outdoor storage				S			S
Parks, playgrounds, golf courses, forest preserves, wildlife sanctuaries and other publicly owned open space	P	P	P	P	P	P	P
Pawnshops		S	S	S			
Permitted public uses, as defined in this Zoning Code	P	P	P	P	P	P	P
Pet shops		P	P	P			
Philanthropic and charitable institutions, as defined in this Code	C	C	C	C	C	C	
Photo processing stores	P	P	P	P			
Photography studios, including the development of film when conducted as part of the retail business		P	P	P			
Plazas and public spaces			P	P		P	
Plumbing and heating sales				P			
Post offices		P	P	P		P	
Print shops with six or fewer employees	P	P	P	P			
Printing and publishing establishments							P
Printing and publishing plants		C	C	C			
Processing or refining of petroleum or coal oil							S
Produce markets		P	P	P			
Quarries							S
Radio and television stations and studios			P	P		P	P
Radio and television towers		S	S	S		S	S
Real estate offices	P	P	P	P	P	P	
Recording studios			P	P		P	P

	Zoning Districts						
USES	**C1**	**C2**	**C3**	**C4**	**O1**	**O2**	**I1**
Recreational institutions, as defined in this Code	C	C	C	C	C	C	
Recycling centers, solid waste							S
Religious institutions, as defined in this Code	C	C	C	C	C	C	
Research and development facilities						P	P
Restaurants	P	P	P	P			
Restaurants with live entertainment or dancing		C	C	C			
Restaurants, eat-in or carry-out, but not including live entertainment, dancing or serving of alcoholic beverages, or restaurants that are drive-in establishments as defined in this Code						C	
Restaurants, eat-in, carry-out or drive-in							P
Restaurants, eat-in, serving alcoholic beverages but without live entertainment or dancing	S	S	S	S		S	
Salt works							S
Sand and gravel extraction							S

Second hand stores and rummage shops		P	P	P			
Sewer cleaning and rodding service				P			
Sewing machine sales and service		P	P	P			
Smelters							S
Single Room Occupancy (SRO)				S			
Soap production							S
Stock yards or slaughter of animals or fowl							S
Streets and alleys	P	P	P	P	P	P	P
Studios for artists, musicians and photographers						P	
Swimming pool sales (no open sales lot)				P			
Synthetic polymers							S
Tallow, grease or lard							S
Tanning salons		P	P	P			

Zoning Districts							
USES	**C1**	**C2**	**C3**	**C4**	**O1**	**O2**	**I1**
Tanning, curing or storage of rawhides or skins							S
Tattoo parlors			S	S			
Taverns and bars with live entertainment or dancing		S	S	S			
Taverns and bars without live entertainment or dancing	S	S	S	S		S	
Taxidermists		P	P	P			
Temporary buildings or trailers for construction purposes for a period not to exceed the duration of construction	P	P	P	P	P	P	P
Theatres, indoor		P	P	P			
Ticket offices, theatre and amusement	P	P	P	P			
Ticket offices, transportation	P	P	P	P			
Tourist information and hospitality centers			P	P			
Trading stamp redemption centers		P	P	P			
Trailer parks and campgrounds				S			
Transfer stations, solid waste							S
Transportation ticket offices					P	P	
Travel bureaus		P	P	P	P	P	
Truck stops				S			
Union halls		P	P	P		P	
Uses that are not otherwise permitted or conditional uses in this or any other district and that are similar in the judgment of the Board of Zoning Appeals to conditional uses in this district	P	P	P	P	P	P	
Utilization or storage of over five pounds of detonable materials as provided under performance standards herein							S

Warehouses and distribution centers under 12,000SF				C			
Warehousing, storage and distribution facilities			S	S		S	P
Water softener service				P			
Wholesaling						S	P
Wrecking yards, as defined in this Code				S			S

(Ord. 18-77. Passed 7-23-18.)

SECTION TWO: Chapter 1141.05 Table 15 of the City of Zanesville Planning and Zoning Code shall be amended to read as follows:

1141.05 TABLE 15: PERMITTED AND CONDITIONAL USES IN BUSINESS DISTRICTS.

Zoning Districts							
USES	**C1**	**C2**	**C3**	**C4**	**O1**	**O2**	**I1**
Abbatoirs or slaughterhouses							S
Accessory uses, buildings and structures to all conditional uses in the district, including off-street parking and loading and signs as provided in Chapters 1149 and 1153	C	C	C	C	C	C	P
Acid uses							S
Adult uses, as defined in this Code				S			S
Air rights development	S	S	S	S	S	S	S
Airports						S	S
Amusement arcades				S			
Animal hospitals		P	P	P			
Antique shops		P	P	P			
Any manufacturing, fabricating, processing, cleaning, servicing, testing, repair or assembly facilities that are not listed elsewhere as permitted or conditional uses, including facilities for abrasive products; boilers and tanks; chemicals; clay; coal, coke and tar products; fiberglass; foundries; glass; metal; textiles; transportation equipment; and any other facilities that are able to conform to the performance standards, Chapter 1161, for heavy industrial uses							S
Arsenals							S
Art shops or galleries		P	P	P			
Auction rooms				S			
~~**Auditoriums and convention and exhibit halls**~~	-	-	-	~~S~~	-	~~C~~	-
Automated teller machines	P	P	P	P	P	P	P
Automobile Title Loans		S	S	S			
Automobile and truck rental establishments				C		C	
Automobile laundries/car wash		S	S	P			
~~**Automobile laundries with five or less bays**~~	-	~~C~~	~~C~~	~~C~~	-	-	-

Zoning Districts							
USES	C1	C2	C3	C4	O1	O2	I1
Automobile part and accessory stores		P	P	P			
~~**Automobile service stations**~~	~~S~~	~~S~~	~~S~~	~~S~~	-	-	~~S~~
Automotive repair, major			**S**	S			S
Automotive repair, minor	**S**	C	C	C			**S**
Bakery plants							P
Batch asphaltic concrete, Portland cement or mortar mixing plants							S
Beauty shops, barber shops and hair styling salons	P	P	P	P	**C**	**C**	
Bench signs		C	C	C			C
Bicycle sales, rental and repair shop		P	P	P			
Blood Plasma Center			S	S			
Blueprinting and photostating establishments		P	P	P		C	
Bottled gas dealers				P			
Building materials and products sales				~~P~~ **C**			**P**
Building supply sales under 8,000 square feet with no outside storage or accessory structure		C	C	C			
Business machine sales, rental and service		P	P	P		C	
Camera and photographic supply stores		P	P	P			
Camping equipment sales		P	P	P			
Camp Grounds				**S**		**S**	**S**
Catering establishments		P	P	P			
Cemeteries	C	C	C	C	C	C	C
Child day care centers, as defined in this Code	S	S	S	S	S	S	
Clothing repair, hat repair and shoe repair stores and tailor shops	P	P	P	P			
Coffee and Donut Shops	**P**	**P**	**P**	**P**		**C**	
~~**Commercial schools, such as for business or electronics**~~	-	-	-	-	-	-	~~**P**~~
Community Center		**C**	**C**	**C**	**S**	**S**	**S**
~~**Computer sales and rental**~~	-	~~**P**~~	~~**P**~~	~~**P**~~	-	-	-
Computer sales, rental and service		**P**	**P**	**P**		C	
Conditional public uses, as defined in this Code	C	C	C	C			C

Zoning Districts							
USES	C1	C2	C3	C4	O1	O2	I1
Conference and Convention Centers		**S**	**S**	**P**	**S**	**P**	**S**
~~Contractors and construction offices~~	-	-	-	~~P~~	-	-	~~P~~
Crematories		**C**	**C**	**C**	**S**	**S**	C
~~**Crematories as part of mortuaries**~~	-	~~**C**~~	~~**C**~~	~~**C**~~	~~**C**~~	~~**C**~~	-

Creosote							C
Currency exchanges	P	P	P	P		C	
Custom dressmaking establishments		P	P	P			
Department stores, junior department stores and discount department stores		P	P	P			
Detention/Correctional Facility							**S**
Distillation of tar							S
Domestic appliance stores, including radio, television, stereo, lighting, clock and music stores	P	P	P	P			
~~**Donut shops**~~	~~**C**~~	~~**C**~~	~~**C**~~	~~**C**~~	-	~~**C**~~	-
Drug stores	P	P	P	P		C	
Drive-in established, as defined in this Code	C	C	C	C			
Dry cleaning plants and laundries							P
~~**Dwelling unit of caretaker or guard**~~	-	-	-	-	-	-	~~**S**~~
Dwelling units above the ground floor ~~**in buildings commercial buildings**~~ **of a commercial use**	P	P	P	P	P	P	
~~**Dwelling units above the ground floor with a ground floor use permitted in O-1 and O-2 Districts meeting the minimum lot area requirements for RM- 2 uses, and all other requirements of the districts**~~	-	-	-	-	~~**P**~~	~~**P**~~	-
Educational institutions as defined in this Code	S	S	S	S	S	S	
E-Commerce	P	P	P	P	P	P	
E-Commerce & Distribution Facility	S	S	S	S			**S**
Electrical showrooms and shops			**C**	P			
Employment agencies		P	P	P		P	
Equipment rental				P			**C**
Exterminating services		P	P	P			**C**

Zoning Districts							
USES	**C1**	**C2**	**C3**	**C4**	**O1**	**O2**	**I1**
Farmer's Markets	**C**	**C**	**C**	**C**	**C**	**C**	**C**
Fat rendering							S
Feed, flour and grain storage							S
Fertilizer							S
Financial institutions, including banks, savings and loans, and commercial loan offices	P	P	P	P	P	P	
Florist shops	P	P	P	P		C	
Food and grocery stores ~~**under 5,000 square feet**~~	~~**P**~~ **C**	P	P	P			
~~**Food and grocery stores over 5,000 square feet**~~	~~**C**~~	~~**P**~~	~~**P**~~	~~**P**~~	-	-	-
Food Trucks		**C**	**C**	**C**	**C**	**C**	
Fortune tellers, palm readers, clairvoyants			P	P			
~~**Fuel and ice sales**~~	-	-	~~**P**~~	~~**P**~~	-	-	-

Fuel storage, bulk				S			S
Furniture stores including upholstery when conducted as part of the retail operations and secondary hereto		P	P	P			
Furrier shops, including incidental stores and conditioning of fur		P	P	P			
Garden, Community	C	C	C	C	C	C	C
Game rooms, as defined in this Code	C	C	C	C			
Garden supply, tool and seed stores, including lawn mower, snowmobile and snow blower sales and service		P	P	P			
General retail	C	C	C	C		S	
Golf courses and country clubs, private	C	C	C	P	C	P	P
Graphics and drafting services					C	P	P
Greenhouses and nurseries				P			**C**
Group Homes			**S**	**S**		**S**	
Gunsmith shops		P	P	P			
Hardware stores		P	P	P			
Health clubs as defined in this Code		P	P	P		P	
High-nuisance manufacturing and processing operations involving:							S
Hobby and craft shops		P	P	P			

Zoning Districts							
USES	**C1**	**C2**	**C3**	**C4**	**O1**	**O2**	**I1**
Hospitals, nursing homes, ~~group homes~~, mental health centers and related uses	S	S	S	S	S	S	
Hotels and motels		~~P~~ **C**	P	P		P	
Indoor amusement establishments, including bowling alleys, pool halls, dance halls, commercial swimming pools and skating rinks		C	C	C			
Insurance offices	P	P	P	P	P	P	
Interior decorating shops, including upholstery and the making of draperies, slip covers and other similar articles when conducted as part of the retail operations and secondary thereto		P	P	P			
Junk yards				S			S
Kennels, pet grooming and veterinary offices		P	P	P		**C**	
Laboratories, medical, dental, research and testing		P	P	P		P	P
Landfills, dumps and incinerators							S
Licensed Firearm dealers, accessory use		**S**	**C**	**C**			
Licenses Firearm dealers, primary use			**S**	**S**			
Liquor stores (package goods only)	P	P	P	P			
Locksmith shops		P	P	P			
Low-nuisance light manufacturing, fabricating, processing, cleaning, servicing, testing, repair and assembly facilities not listed elsewhere as permitted or conditional uses that are able to conform to the performance standards, Chapter 1161, for light industry herein				**S**			P

Machinery sales				C			C
Mail order houses and letter shops				P		P	
Manufactured buildings approved by the Building Code for commercial use and conforming with the seven standards listed in Table 1137.05 Manufactured buildings, other than buildings or trailers for construction purposes, not complying with Table 1137.05 may be approved for a period not to exceed one year.		C	C	C			
Manufactured home sales (no open sales lot)				P			
Massage and massage services		~~S~~ C	~~S~~ C	~~S~~ C	S		

Zoning Districts							
USES	**C1**	**C2**	**C3**	**C4**	**O1**	**O2**	**I1**
Medical, dental and optometry offices and clinics	P	P	P	P	P	P	
~~**Meeting and banquet halls**~~	-	~~**P**~~	~~**P**~~	~~**P**~~	-	~~**P**~~	-
~~**Millinery shops**~~	-	~~**P**~~	~~**P**~~	~~**P**~~	-	-	-
Mini-warehouses				S			C
Model home and garage displays				S			
Monument sales (no open sales lot)				P			
Mortuaries, as defined in this Code		C	C	C	C	C	
Motor vehicle sales (no open sales lot) or rental, including cars, trucks, boats, trailers, recreational vehicles, motorcycles, motor scooters and mopeds				P			
Motor vehicle, trailer, and mobile home repair services				S			
Motor, rail or air freight terminals							C
Multi-family residential uses					C	C	
Natural or synthetic rubber, caoutchouc or gutta percha							C
Newspaper distribution agencies for home delivery and retail trade	P	P	P	P		P	
Newspaper, magazine and tobacco shops	P	P	P	P		C	
Nightclub			S	S			S
Offices, business and professional		P	P	P	P	P	
Offices, Construction and Contractor			**P**	**P**	**C**	**C**	**P**
Offices, government, political and institutional		P	P	P	P	P	
Off-street parking lots, public garages or storage garages as principal uses			P	P		C	C
~~**Off-street parking lots, public garages or storage garages, other than as accessory uses**~~	-	-	-	-	-	~~**C**~~	-
Open sales lots as defined in this Code as a principal or accessory use				S			
Ore reduction							S
Other temporary uses approved in accordance with provisions for temporary uses in Chapter 1129							P

Zoning Districts							
USES	**C1**	**C2**	**C3**	**C4**	**O1**	**O2**	**I1**
Outdoor advertising signs				P			P

Outdoor amusement establishments, including archery ranges, miniature golf and similar facilities				S			
Outdoor Café and Eating Areas	**S**	**C**	**C**	**C**		**C**	
~~**Outdoor recreation or indoor/outdoor entertainment centers**~~	-	-	-	~~**S**~~	-	-	~~**S**~~
Outdoor storage				S			S
Parks, playgrounds, golf courses, forest preserves, wildlife sanctuaries and other publicly owned open space	P	P	P	P	P	P	P
Pawnshops		S	S	~~**S**~~ **C**			
Permitted public uses, as defined in this Zoning Code	P	P	P	P	P	P	P
Pet shops		P	P	P			
Philanthropic and charitable institutions, as defined in this Code	C	C	C	C	C	C	
~~**Photo processing stores**~~	~~**P**~~	~~**P**~~	~~**P**~~	~~**P**~~	-	-	-
Photography studios, including the development of film when conducted as part of the retail business		P	P	P			
~~**Plazas and public spaces**~~	-	-	~~**P**~~	~~**P**~~	-	~~**P**~~	-
Plumbing and heating sales				P			**P**
Post offices		P	P	P		P	
Print shops with six or fewer employees	P	P	P	P			
Printing and publishing establishments		**C**	**C**	**C**			P
~~**Printing and publishing plants**~~	-	~~**C**~~	~~**C**~~	~~**C**~~	-	-	-
Processing or refining of petroleum or coal oil							S
~~**Produce markets**~~	-	~~**P**~~	~~**P**~~	~~**P**~~	-	-	-
Quarries							S
Radio and television stations and studios			P	P		P	P
Radio and television towers		S	S	S		S	S
Real estate offices	P	P	P	P	P	P	
Recording studios			P	P		P	P

Zoning Districts							
USES	**C1**	**C2**	**C3**	**C4**	**O1**	**O2**	**I1**
Recreational institutions, as defined in this Code	C	C	C	C	C	C	
Recycling centers, solid waste							S
Religious institutions, as defined in this Code	C	C	C	C	C	C	
Research and development facilities			**C**	**C**	**P**	P	P
Restaurants	P	P	P	P	**C**	**C**	**C**
~~**Restaurants with live entertainment or dancing**~~	-	~~**C**~~	~~**C**~~	~~**C**~~	-	-	-
~~**Restaurants, eat-in or carry-out, but not including live entertainment, dancing or serving of alcoholic beverages, or restaurants that are drive-in establishments as defined in this Code**~~	-	-	-	-	-	~~**C**~~	-
~~**Restaurants, eat-in, carry-out or drive-in**~~	-	-	-	-	-	-	~~**P**~~

Restaurants, eat-in, serving alcoholic beverages ~~but without live entertainment or dancing~~	S	S	S	**S**	S	S	**S**
Salt works							S
Sand and gravel extraction							S
Second hand stores and rummage shops		P	P	P	**C**	**C**	
Service Stations			**S**	**S**			**S**
Sewer cleaning and rodding service				P			**P**
~~Sewing machine sales and service~~	-	~~P~~	~~P~~	~~P~~	-	-	-
Smelters							S
Single Room Occupancy (SRO)			**S**	S			
Soap production							S
Stock yards or slaughter of animals or fowl							S
Streets and alleys	P	P	P	P	P	P	P
Studios for artists, musicians and photographers		**P**	**P**	**P**		~~P~~ **C**	
Swimming pool sales (no open sales lot)				P			
Synthetic polymers							S
Tallow, grease or lard							S
Tanning salons		P	P	P	**C**	**C**	

Zoning Districts							
USES	**C1**	**C2**	**C3**	**C4**	**O1**	**O2**	**I1**
Tanning, curing or storage of rawhides or skins							S
Tattoo parlors			S	S			
~~Taverns and bars with live entertainment or dancing~~	-	~~S~~	~~S~~	~~S~~	-	-	-
Taverns and bars ~~without live entertainment or dancing~~	S	S	~~S~~ **C**	~~S~~ **C**	**S**	S	**S**
Taxidermists		P	P	P			
Temporary buildings or trailers for construction purposes for a period not to exceed the duration of construction	P	P	P	P	P	P	P
Theatres, indoor		P	P	P			
Ticket offices, theatre ~~and~~ amusement **and Transportation**	P	P	P	P	**C**	**C**	
~~Ticket offices, transportation~~	~~P~~	~~P~~	~~P~~	~~P~~	-	-	-
Tourist information and hospitality centers			P	P			
~~Trading stamp redemption centers~~	-	~~P~~	~~P~~	~~P~~	-	-	-
Trailer parks ~~and campgrounds~~				S			
Transfer stations, solid waste							S
~~Transportation ticket offices~~	-	-	-	-	~~P~~	~~P~~	-
Travel bureaus		P	P	P	P	P	
Truck stops				S			

Union halls		P	P	P		P	
Uses that are not otherwise permitted or conditional uses in this or any other district and that are similar in the judgment of the ~~**Board of Zoning Appeals**~~ **Planning and Zoning Administrator** to conditional uses in this district	~~**P**~~ **C**	~~**P**~~ **C**	~~**P**~~ **C**	~~**P**~~ **C**	~~**P**~~ **C**	~~**P**~~ **C**	
Utilization or storage of over five pounds of detonable materials as provided under performance standards herein							S
Warehouses and distribution centers under 12,000SF				C			
Warehousing, storage and distribution facilities			S	S		S	P
Water softener service				P			
Wholesaling						S	P
Wrecking yards, as defined in this Code				S			S

PASSED: _____, 2020.

ATTEST: _____
SUSAN CULBERTSON
CLERK OF COUNCIL

_____
DANIEL M. VINCENT
PRESIDENT OF COUNCIL

APPROVED: _____, 2020.

_____
DON MASON
MAYOR

THIS LEGISLATION
APPROVED AS TO FORM

_____
LAW DIRECTOR'S OFFICE

Ways & Means Committee
Ann Gildow, Chair

ORDINANCE NO. 2020 - 14

AN ORDINANCE AUTHORIZING THE CITY TO ENTER INTO ENERGY SAVINGS CONTRACTS WITH ABM TECHNICAL SOLUTIONS, LLC.

WHEREAS, The City of Zanesville's City Council (the "Council"), is authorized under Ohio Revised Code ("ORC") Section 717.02 to select a vendor for the purpose of developing an energy conservation report; and,

WHEREAS, Ordinance No. 19-77 authorized and directed the Mayor to enter into an agreement with the firm of ABM Technical Solutions, LLC for the provision of an energy conservation report; and,

WHEREAS, as a result of the energy conservation report, the Council has determined to undertake capital projects consisting of, but not limited to, all or some of the following: a guaranteed energy savings and conversion project, including the planning, design, purchase, acquisition, installation, construction, equipping and furnishing of energy savings repairs, renovations, upgrades and improvements to buildings and facilities operated by the City of Zanesville as funds are available to undertake and complete (the "Project"); and,

WHEREAS, in order to implement the Project, the Council proposes to enter into an Energy Savings Contract and an Energy Equipment Installation Contract with ABM Technical Solutions, LLC (the "Contracts"); and,

WHEREAS, the City is authorized under the Constitution and laws of the State of Ohio (the "State"), to enter into financing agreements (including lease obligations) to finance capital improvements for the governmental and miscellaneous functions of the City if so desired; and

WHEREAS, pursuant to the Contracts, the City Council desires to acquire certain equipment with a cost not to exceed $11,800,000, constituting improvements at the various City facilities, and water metering infrastructure; and,

WHEREAS, the proposed improvements will result in an estimated savings in energy, maintenance, voided capital costs, opportunity cost, and operating expense of $19,756,469 over twenty (20) years.

NOW, THEREFORE, BE IT ORDAINED by the Council of the City of Zanesville, State of Ohio, that:

SECTION 1. That the Mayor be and hereby is authorized and directed to enter into agreements with the firm of ABM Technical Solutions, LLC for the provision of the aforementioned services.

SECTION 2. That the City Council finds that the amount of money to be spent on the Energy Conservation Measures is not likely to exceed the amount of money the City will save in energy, operating, maintenance, opportunity cost and voided capital costs over the average system life of the measures as specified in the energy conservation report.

ORDINANCE NO. 2020 - 14

SECTION 3. This ordinance shall take effect and be in force from and after its passage and publication according to law.

PASSED: _____, 2020

ATTEST:

SUSAN CULBERTSON,
Clerk of Council

DANIEL M. VINCENT,
President of Council

APPROVED: _____, 2020

DONALD MASON,
Mayor

THIS LEGISLATION APPROVED AS TO FORM

LAW DIRECTOR'S OFFICE

Ways & Means Committee
Ann Gildow, Chair

ORDINANCE NO. 2020 - 15

AN ORDINANCE AUTHORIZING THE CITY TO ENTER INTO A TAX-EXEMPT MUNICIPAL LEASE FOR THE FUNDING OF ENERGY CONSERVATION MEASURES IN THE CITY PROVIDED BY ABM TECHNICAL SOLUTIONS, LLC.

WHEREAS, Ordinance No. 2020-14 authorized and directed the City to enter into an agreement with ABM Technical Solutions, LLC in an amount not to exceed $11,800,000 for the implementation of energy conservation measures throughout the City; and,

WHEREAS, the City is authorized under the laws of the State of Ohio, to enter into financing agreements, including lease obligations, to fund capital improvements for the governmental and miscellaneous functions of the City if so desired.

NOW BE IT ORDAINED, by the City Council of the City of Zanesville, State of Ohio, that:

SECTION 1. The Mayor is hereby authorized and directed to enter into a municipal lease agreement in order to fund the implementation of energy conservation measures provided by ABM Technical Solutions, LLC.

SECTION 2. It is hereby found and determined that all formal actions of this Council concerning and relating to the passage of this ordinance were adopted in an open meeting of this Council, and that all deliberations of this Council and any of its committees that resulted in such formal action were in meetings open to the public in compliance with all legal requirements, including Section 121.22 of the Revised Code of Ohio.

SECTION 3. This ordinance shall take effect and be in force from and after its passage and publication according to law.

PASSED: _____, 2020

ATTEST:

SUSAN CULBERTSON,
Clerk of Council

DANIEL M. VINCENT,
President of Council

APPROVED: _____, 2020

DONALD MASON,
Mayor

THIS LEGISLATION APPROVED AS TO FORM

LAW DIRECTOR'S OFFICE